tepo

Pressure Gauges

- Standart Gauges
- Steel Case Gauges
- Stainless Steel Gauges
- Stainless Steel Safety Gauges
- Differential Pressure Gauges
- Capsule Pressure Gauges
- Horizantal Diaphragm Gauges
- Test Gauges
- Electric Contact Gauges
- Accessories
- Diaphragm Seperate Gauges
- Bimetal Thermometers
- Thermowells

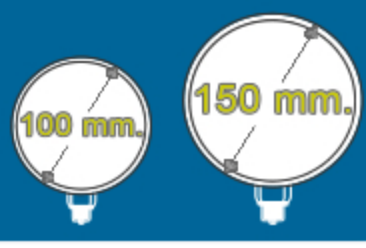

General Series Pressure Gauges

MN-S

Product Overview

MN-S series General Service Pressure Gauge suitable for the non–explosion, non–crystal, non–solid and non–corrosion to the copper alloy. The pressure system consists of socket, bourdon tube and transfer mechanism and show the value through the pointer.The pressure gauge of 100 and 150mm has many ways to mount: bottom mounting, bottom mounting with back flange, bottom panel mounting with front flange, back mounting, back panel mounting with front flange and so on.

100 mm. Bottom Connection

MN-S-100..Bottom

150 mm. Bottom Connection

MN-S-160..Bottom

100 mm. Back Connection

MN-S-100..Back

150 mm. Back Connection

MN-S-160..Back

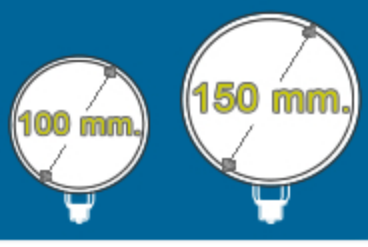

General Series Pressure Gauges

MN-S

Specifications

- Accuracy: ±1.6%
- Range: 0 ~ 1 Bar to 0 ~ 600 Bar
- Working pressure: Steady: 3/4 of full scale value. Fluctuating: 3/2 of full scale value. Short time: full scale value.
- Ambient temperature: –40 ~ 70℃ (Relative humidity ≤85%)
- Temperature impact: The temperature change is not More than 0.6%/10℃ When the temperature deviates from 20 ± 5℃.
- Bourdon tube / socket: Soft soldering for phosphor bronze bourdon tube and brass Socket.
- Welding: Φ100、Φ150 4% silver Soldering Over 0 ~ 40 Bar , high temperature type, 40% Silver Soldering available for Stainless Steel Bourdon Tube.
- Internals: Copper alloy.
- Case: ST13 with black plated
- Dial: white aluminium dials with black marking .
- Pointer: Aluminium, black.
- Window: plain glass, plexiglass.
- Connection: G1/2", 1/2" NPT and Other threads available.

Table of ranges		
-1 ~ 0 Bar	1 Bar	40 Bar
-1 ~0.6 Bar	1.6 Bar	60 Bar
-1 ~ 1.5 Bar	2.5 Bar	100 Bar
-1 ~ 3 Bar	4 Bar	160 Bar
-1 ~5 Bar	6 Bar	250 Bar
-1 ~ 9 Bar	10 Bar	400 Bar
-1 ~ 15 Bar	16 Bar	600 Bar
-1 ~ 24 Bar	25 Bar	

How to Order

Please specify the following properties when the manometer ordering.

- Model number,
- Dial size,
- Range and pressure unit,
- Connection type,
- Connection thread,
- Accuracy,
- If necessary; special scale, accessories

For example: MN-S-150-(0/100 Bar)-Back-R1/2-1.6

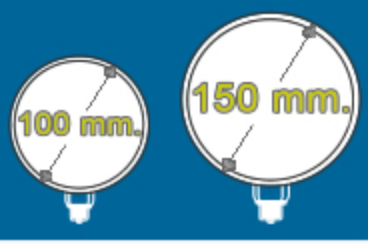

General Series Pressure Gauges

MN-S

Dimensions (mm.)

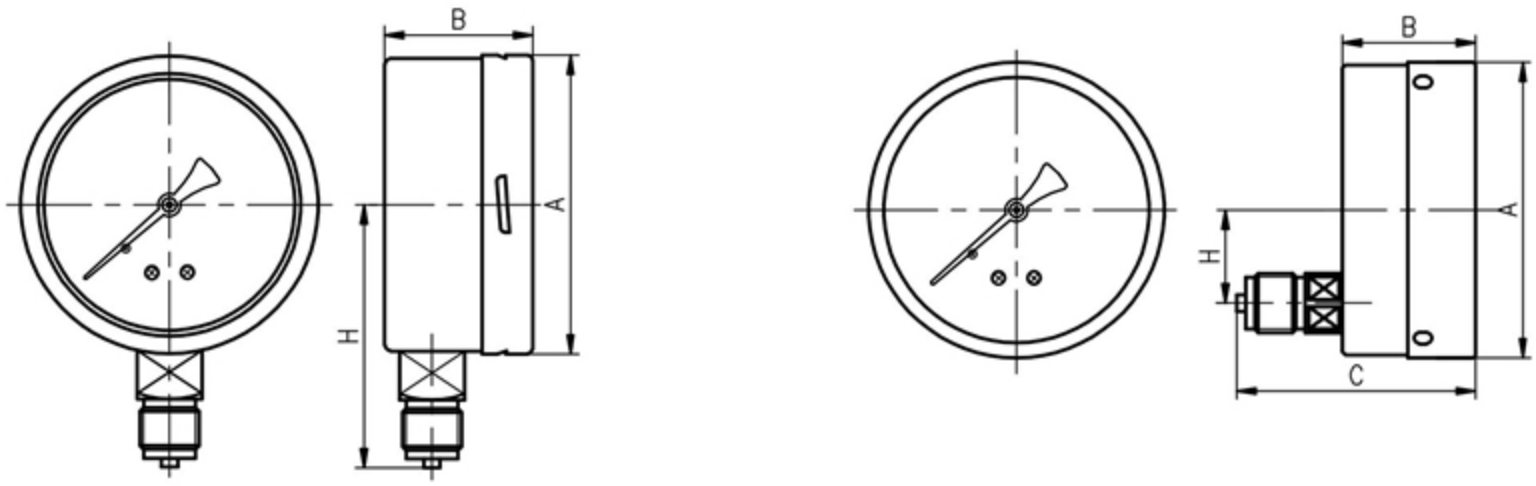

Diameter 100 mm.

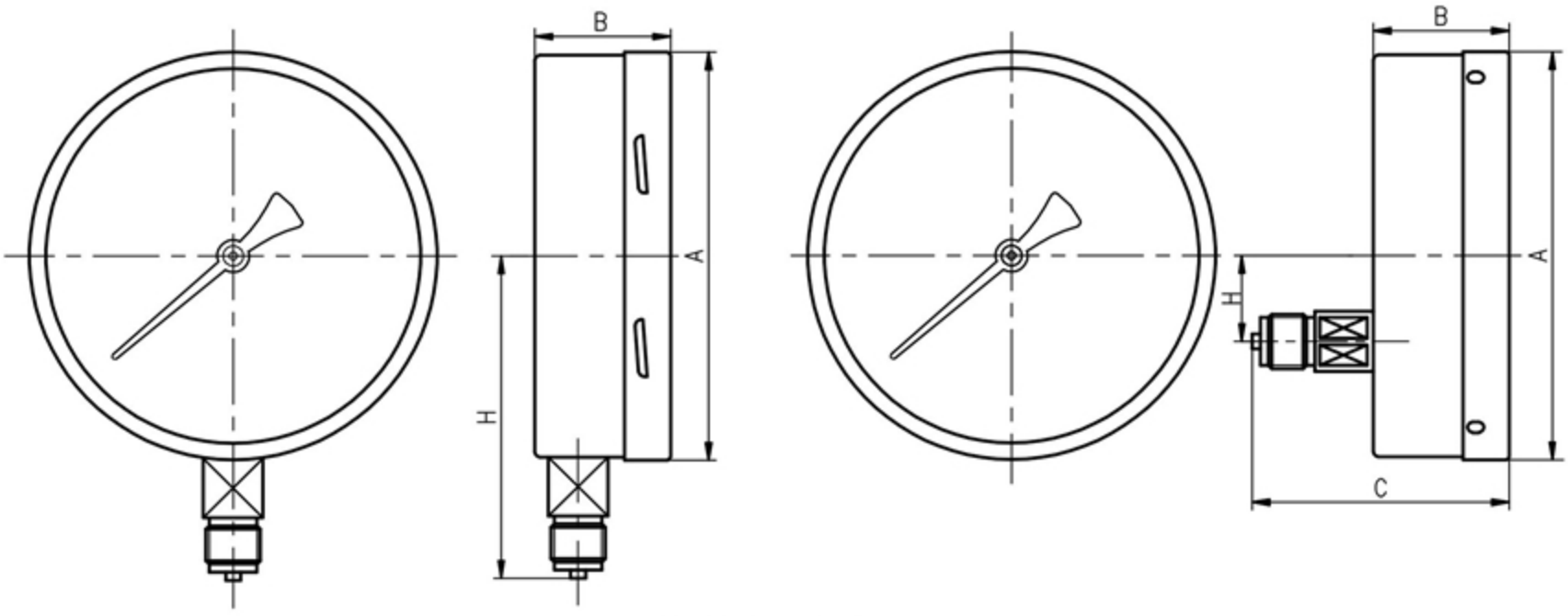

Diameter 150 mm.

Type	A	B	C	H
100 mm.Bottom	101mm	50mm		89mm
100 mm.Back	100mm	45mm	80mm	31.5mm
150 mm.Bottom	150mm	50mm		118mm
150 mm.Back	150mm	50mm	94.5mm	31.5mm

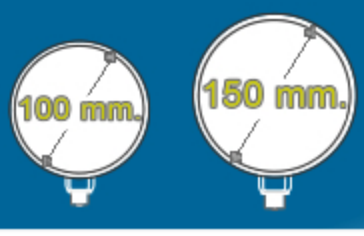

Steel Case Pressure Gauges

MN-C

MN-C-P

General
Corrosion–proof
Pressure Gauge

Specifications

- Diameter: 100mm; 150mm
- Accuracy: ± 1.6%, (± 1% available)
- Ranges: -1~1000 Bar
- Degree of protection: IP55
- Ambient temperature: –40℃ ~ 70℃. Maximum +200℃
- Connection: M20X1.5, G1/2",1/2" NPT, G3/8", 3/8" NPT
- Case: Black painted steel
- Socket: MN-C-P All Stainless Steel Pressure Gauge is AISI 304 original color; MN-C-A and MN-C-C is 45# Carbonsteel
- Bourdon tube: Stainless Steel Argon–arc welding
- Internals: Stainless Steel
- Window: Instrument plain glass

MN-C-A

Ammonia
Pressure Gauge

Ranges		
-1~0 Bar	0~0.6 Bar	0~25 Bar
-1~0.6 Bar	0~1 Bar	0~40 Bar
-1~1.5 Bar	0~1.6 Bar	0~60 Bar
-1~3 Bar	0~2.5 Bar	0~100 Bar
-1~5 Bar	0~4 Bar	0~160 Bar
-1~9 Bar	0~6 Bar	0~250 Bar
-1~15 Bar	0~10 Bar	0~400 Bar
-1~24 Bar	0~16 Bar	0~600 Bar
		0~1000 Bar

MN-C-C

Heat–proof
Pressure Gauge

How to Order

Please specify the following properties when the manometer ordering.

- Model number,
- Dial size,
- Dry or Liquid filled, (GD=Gliserin dolgulu, SD=Silikon dolgulu)
- Range and pressure unit,
- Panel mounting; Front Flange (FF), Rear Flange (RF),
- Connection type,
- Connection thread,
- Accuracy,
- If necessary; special scale, accessories

For example: *MN-C-C-150-(0/100 Bar)-Back-R1/2-1*

Eryaman AVM. 2.Cad.No:11/50 06793 Ankara-TURKEY • Tel: +90 312 279 44 51 • Fax: +90 312 279 55 58 • e-mail: info@teknopoli.com • web: http://www.teknopoli.com

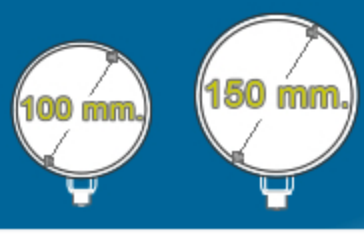

Steel Case Pressure Gauges

MN-C

Dimensions (mm.)

Directly mounting

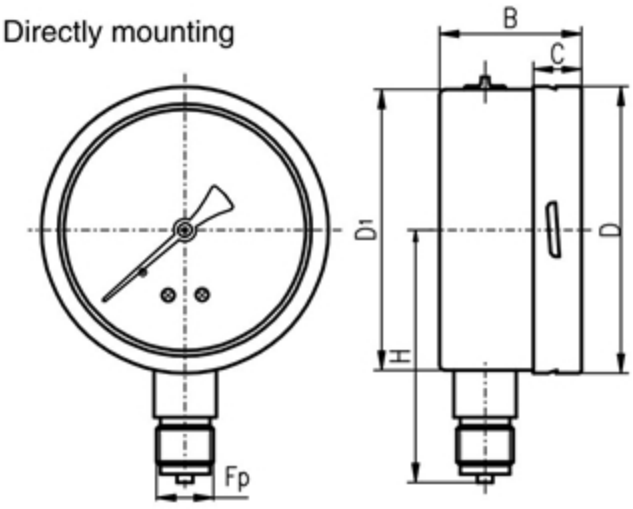

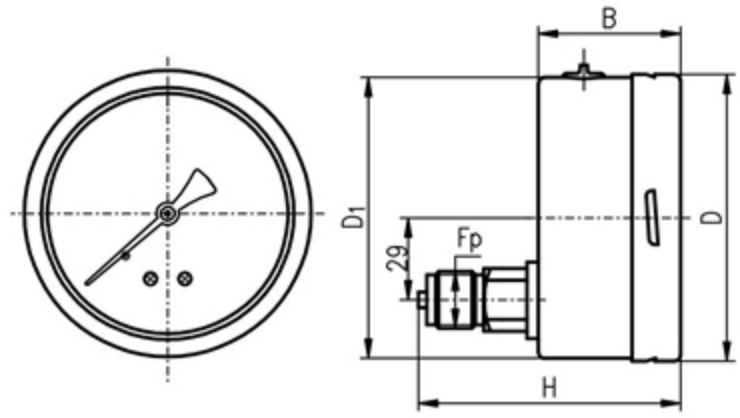

Bottom mounting Bayonet flange mounting

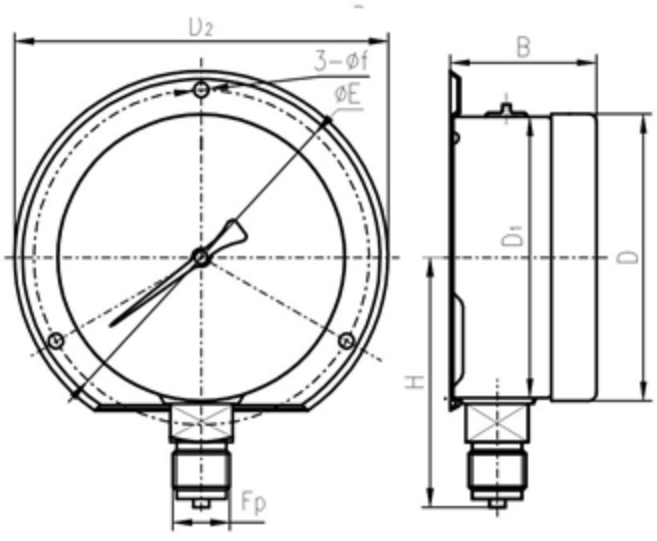

Back mounting Bayonet flange mounting

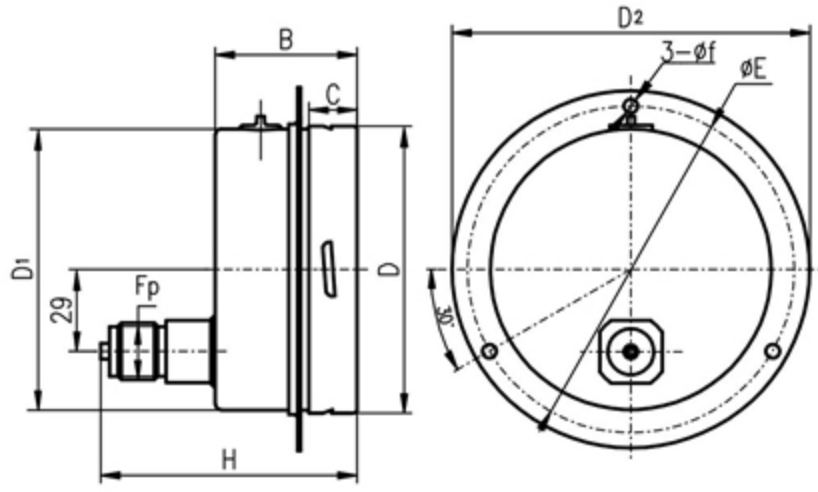

Dimension	D	D1	B	H	Fp	D2	ΦE	Φf
Φ100	101	99	50	89/86	M20 1.5/NPT1/2	131.5	118	5.5
Φ100	101	99	50	90/87	M20 1.5/NPT1/2	128	118.5	5.5
Φ150	149	147	50	118/115	M20 1.5/NPT1/2	180	162	6

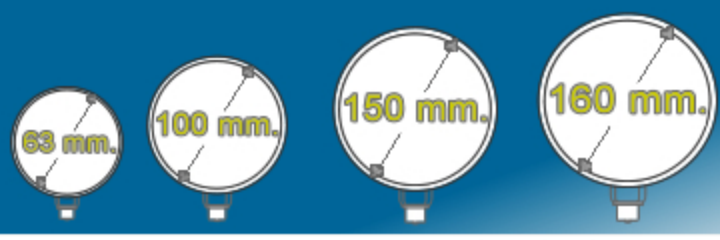

Stainless Steel Pressure Gauge

MN-S
MN-P

- All Stainless Steel Inside bayonet Corrosion–proof pressure gauge
- All Stainless Steel Inside bayonet Vibration–proof bayonet Corrosion–proof pressure gauge
- Inside bayonet General Vibration–proof pressure gauge

General

TEPO All stainless steel vibration–proof pressure gauge could measure the pressure of the corrosion gas and liquid or be applied to the occasion with dynamic load and vibration.
General vibration–proof pressure gauge is applied to the occasion with dynamic load and vibration or to measure the pressure of gas and liquid which can not corrode copper alloy.

All stainless steel inside bayonet corrosion–proof pressure gauge could measure the pressure of the corrosion gas and liquid or be applied to the corrupt occasion.

Products

Code	Characteristics
MN-S-63 MN-P-63	Φ63 Inside bayonet Vibration–proof pressure gauge
MN-P-100 MN-P-150	Φ100; Φ150 All Stainless Steel pressure gauge (Inside bayonet)
MN-P-100-.. MN-P-150-.. MN-P-160-..	Φ100; Φ150; Φ160 General Vibration–proof pressure gauge (Inside bayonet, Installation)

Eryaman AVM. 2.Cad.No:11/50 06793 Ankara-TURKEY Tel: +90 312 279 44 51 Fax: +90 312 279 55 58 e-mail: info@teknopoli.com web: http://www.teknopoli.com

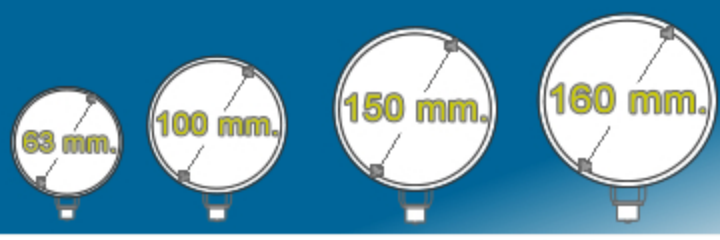

Stainless Steel Pressure Gauge

MN-S
MN-P

Technical Specifications

- Bottom mounting & Back mounting
- 1–piece type socket, Inside bayonet case with ring
- Stainless steel Internals or Brass Internals, 304 original stainless steel case.
- Dry type or Glycerin oil filled available
- M14X1.5; NPT1/4; G1/4 connection
- Accuracy: ±2.5 %, optional ±1.6 %
- Range: 1 to 1000 Bar
- Ambient temperature:
  Glycerin filled: –5℃–60℃; dry type: –40–60℃

Type	Type code	
	Bottom mounting	Back mounting
Brass internals, dry type	MN-S-63-Bottom	MN-S-63-Back
Brass internals, liquid filling	MN-S-63-..-Bottom	MN-S-63-..-Back
Stainless Steel internals, dry type	MN-P-63-Bottom	MN-P-63-Back
Stainless Steel internals, liquid filling	MN-P-63-..-Bottom	MN-P-63-..-Back

Dimensions (mm.)

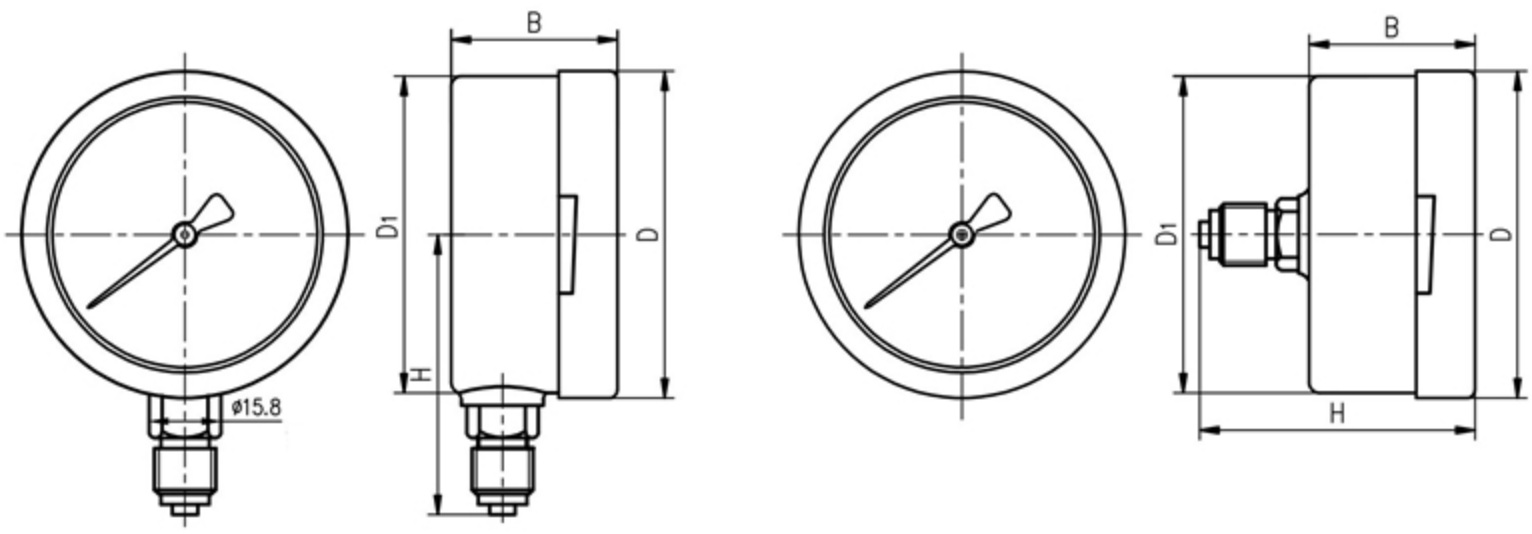

Type	D	D1	B	H
Bottom Connection	Φ64	Φ62	33	54.5
Back Connection	Φ64	Φ62	33	52.5

Eryaman AVM. 2.Cad.No:11/50 06793 Ankara-TURKEY Tel: +90 312 279 44 51 Fax: +90 312 279 55 58 e-mail: info@teknopoli.com web: http://www.teknopoli.com

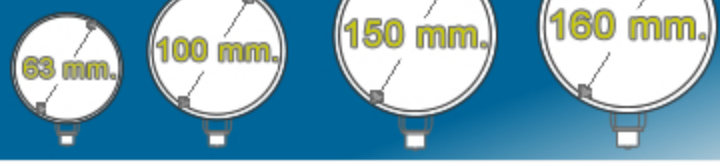

Stainless Steel Pressure Gauge

MN-S
MN-P

MN-P-100-Bottom

MN-P-100-Back

MN-P-100-..-Back

Specifications

- Standard executive: EN 837
- Diameter: 100mm; 150mm
- Accuracy: ± 1.6% (± 1% available)
- Ranges: -1 ~ 1000 Bar
- Degree of protection: IP65
- Ambient temperature: –40℃ ~ 70℃.
  Maximum temperature: +200℃Max,
- Connection: M20X1.5, G1/2",1/2" NPT, G3/8", 3/8" NPT
- Case: AISI 304 original color
  (Polishing available); Inside bayonet
- Socket: AISI 304 original color
  (22x22 Square Stainless Steel)
- Bourdon tube: AISI 316 Argon–arc welding
- Internals: 304 Stainless Steel
- Window: instrument plain glass
  (Laminated safety glass, organic glass available)

Ranges		
-1~0 Bar	0~0.6 Bar	0~25 Bar
-1~0.6 Bar	0~1 Bar	0~40 Bar
-1~1.5 Bar	0~1.6 Bar	0~60 Bar
-1~3 Bar	0~2.5 Bar	0~100 Bar
-1~5 Bar	0~4 Bar	0~160 Bar
-1~9 Bar	0~6 Bar	0~250 Bar
-1~15 Bar	0~10 Bar	0~400 Bar
-1~24 Bar	0~16 Bar	0~600 Bar
		0~1000 Bar

How to Order

Please specify the following properties when the manometer ordering.

- Model number,
- Dial size,
- Dry or Liquid filled (GD=Glycerin filled, SD= Silicone filled)
- Range and pressure unit
- Panel mounting; Front Flange (FF), Rear Flange (RF), U-Clamp (U)
- Connection type,
- Connection thread,
- Accuracy,
- If necessary; Special scale,Diaphragm seals,..

For example: *MN-P-100-(0/160 Bar)-U-Back-R1/2-1.6*

Eryaman AVM. 2.Cad.No:11/50 06793 Ankara-TURKEY Tel: +90 312 279 44 51 Fax: +90 312 279 55 58 e-mail: info@teknopoli.com web: http://www.teknopoli.com

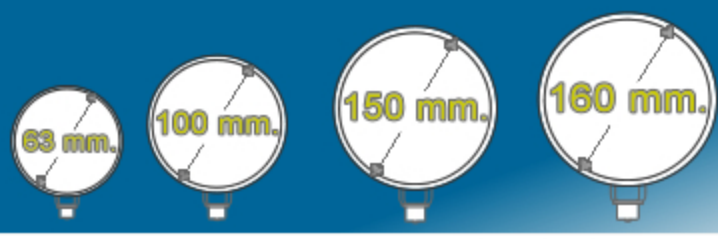

Stainless Steel Pressure Gauge

MN-S
MN-P

Mounting Types

Bottom connecting

Bottom connecting, Surface flange mounted

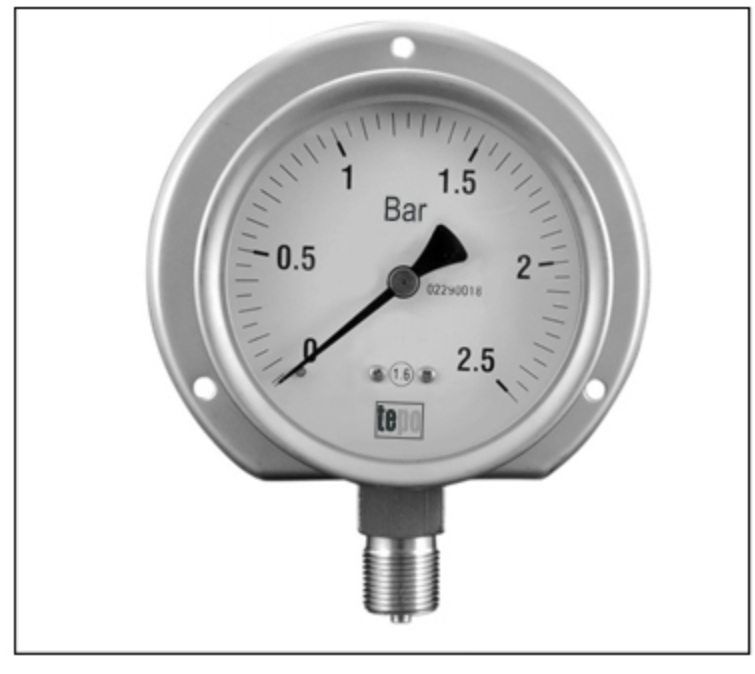

Lower back connecting, Liquid filled

Lower back connecting, Surface flange mounted

Lower back connecting, U-clamp panel mounted

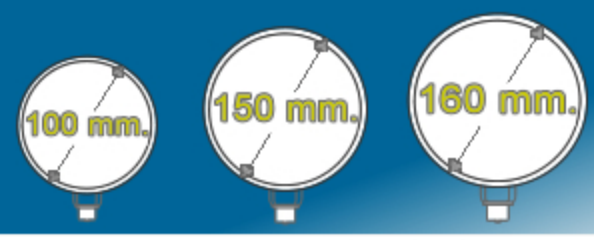

Stainless Steel Pressure Gauge

MN-S
MN-P

Dimensions (mm.)

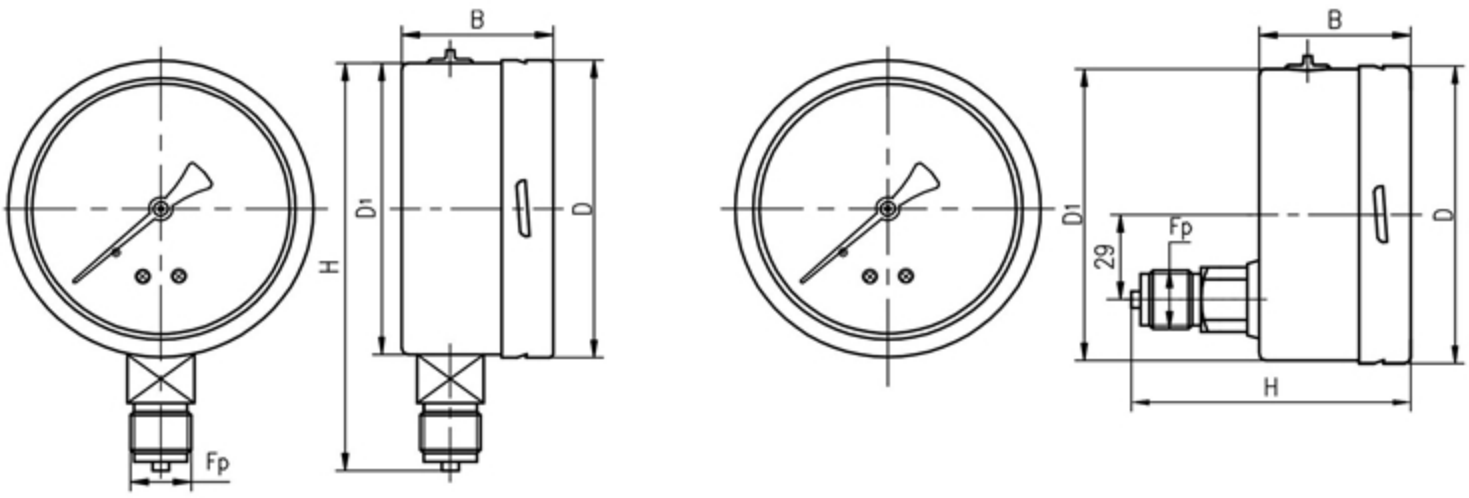

Diameter	D	D1	B	H	Fp	D2	ΦE	Φf
Φ100	101	99	50	138/135	M20X1.5/NPT1/2	131.5	118	5.5
Φ150	149	147	50	192/189	M20X1.5/NPT1/2	181	162	6

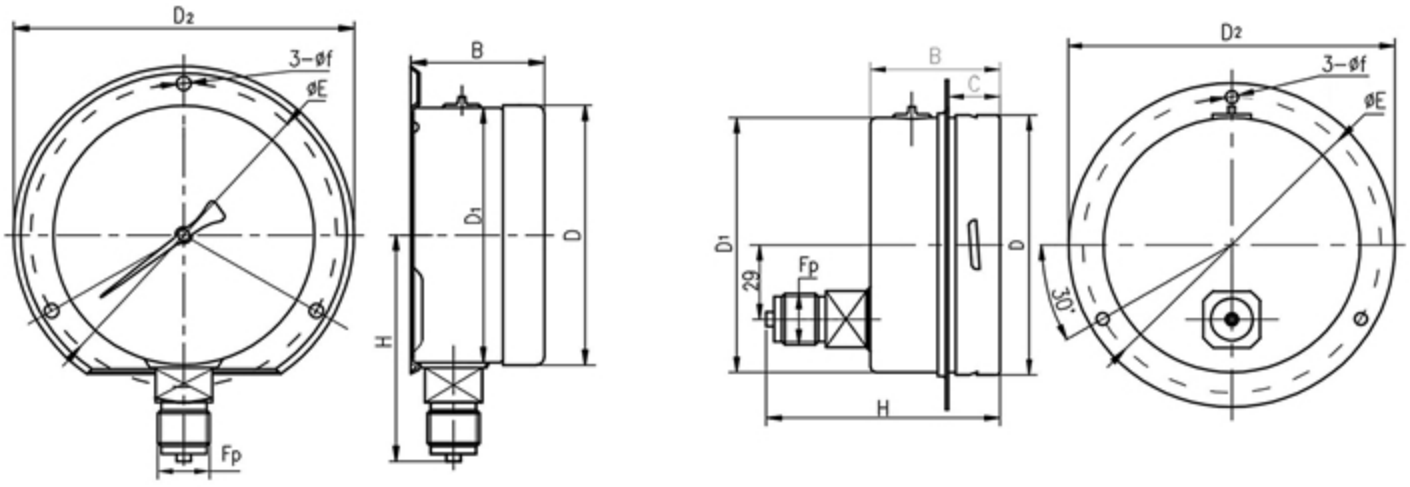

Diameter	D	D1	B	H	Fp	D2	ΦE	Φf
Φ100	101	99	50	92/89	M20X1.5/NPT1/2	128	117.5	5.5
Φ150	149	147	50	91/88	M20X1.5/NPT1/2	180	165	6

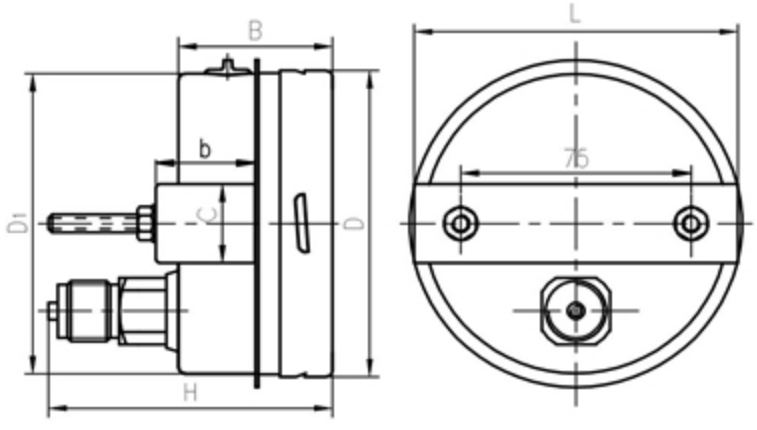

Diameter	D	D1	B	H	Fp	b	c	L
Φ100	101	99	50	92/89	M20X1.5/NPT1/2	32	26	106

Eryaman AVM. 2.Cad.No:11/50 06793 Ankara-TURKEY Tel: +90 312 279 44 51 Fax: +90 312 279 55 58 e-mail: info@teknopoli.com web: http://www.teknopoli.com

Liquid Filled Stainless Pressure Gauge

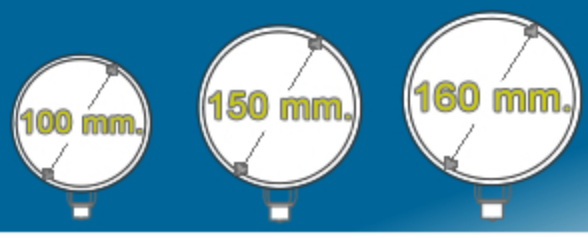

MN-S
MN-P

MN-P-100-..-Bottom

MN-P-100-..-Back

MN-P-100-..-Bottom

Specifications

- Standard executive: EN 837
- Diameter: 100mm; 150mm; 160mm
- Accuracy: ±1.6% (±1% available)
- Ranges: -1 ~ 1000 Bar (See range table)
- Degree of protection: IP65
- Ambient temperature: –5℃ ~ +60℃
- Connection: M20X1.5, G1/2",1/2" NPT, G3/8", 3/8" NPT
- Case: Stainless steel
- Socket: AISI 304 SS
- Bourdon tube: AISI 316 SS
- Seal: EPDM
- Liquid filling: Glycerin
- Internals: Stainless Steel
- Window: Instrument plain glass
  (Laminated safety glass, organic glass auailable)

Ranges		
-1~0 Bar	0~0.6 Bar	0~25 Bar
-1~0.6 Bar	0~1 Bar	0~40 Bar
-1~1.5 Bar	0~1.6 Bar	0~60 Bar
-1~3 Bar	0~2.5 Bar	0~100 Bar
-1~5 Bar	0~4 Bar	0~160 Bar
-1~9 Bar	0~6 Bar	0~250 Bar
-1~15 Bar	0~10 Bar	0~400 Bar
-1~24 Bar	0~16 Bar	0~600 Bar
		0~1000 Bar

How to Order

Please specify the following properties when the manometer ordering.

- Model number,
- Dial size,
- Dry or Liquid filled (GD=Glycerin filled, SD= Silicone filled)
- Range and pressure unit
- Panel mounting; Front Flange (FF), Rear Flange (RF)
- Connection type,
- Connection thread,
- Accuracy,
- If necessary; special scale,..

For example: *MN-P-GL-160-(0/10 Bar)-Bottom-R1/2-1*

Eryaman AVM. 2.Cad.No:11/50 06793 Ankara-TURKEY Tel: +90 312 279 44 51 Fax: +90 312 279 55 58 e-mail: info@teknopoli.com web: http://www.teknopoli.com

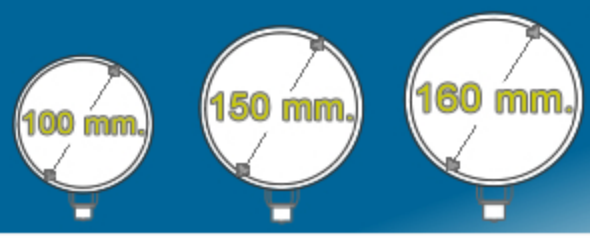

Liquid Filled Stainless Pressure Gauge

MN-S
MN-P

Dimensions (mm.)

Directly mounting

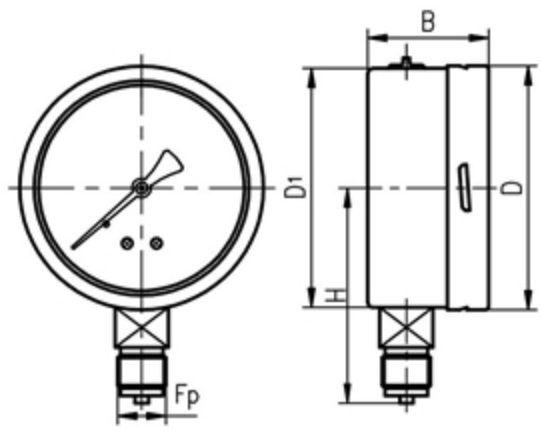

Bayonet flange mounting

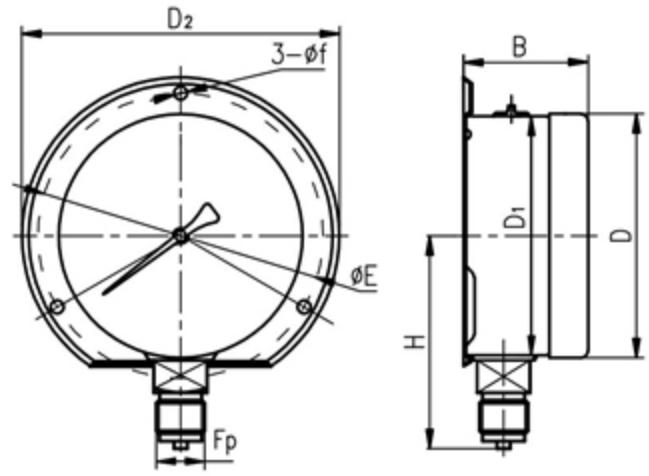

Directly mounting

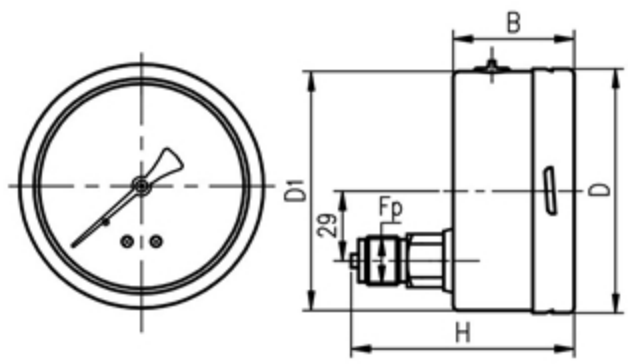

Bayonet flange mounting

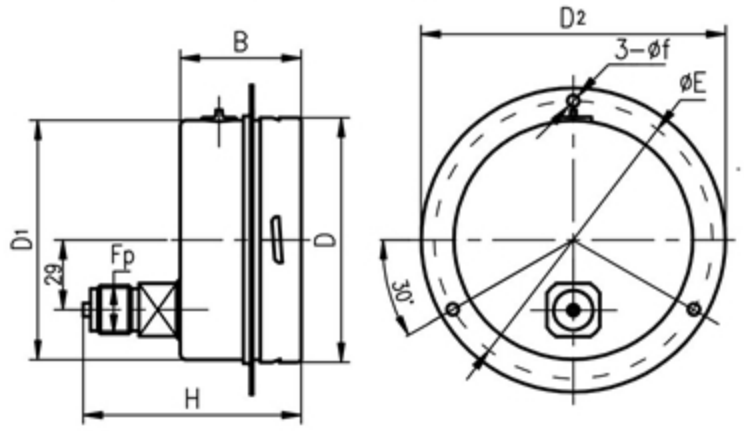

Diameter	D	D1	B	H	Fp	D2	ϕ E	ϕ f
ϕ 100	101	99	50	89/86	M20x1.5/NPT1/2	131.5	118	5.5
ϕ 150	149	147	50	118/115	M20x1.5/NPT1/2	181	162	6
ϕ 160	161	159	50	124/121	M20x1.5/NPT1/2	196	178	5.8

Diameter	D	D1	B	H	Fp	D2	ϕ E	ϕ f
ϕ 100	101	99	50	92/89	M20x1.5/NPT1/2	128	117.5	5.5
ϕ 150	149	147	50	91/88	M20x1.5/NPT1/2	180	165	6
ϕ 160	161	159	50	89/86	M20x1.5/NPT1/2	196	178	5.8

Eryaman AVM. 2.Cad.No:11/50 06793 Ankara-TURKEY Tel: +90 312 279 44 51 Fax: +90 312 279 55 58 e-mail: info@teknopoli.com web: http://www.teknopoli.com

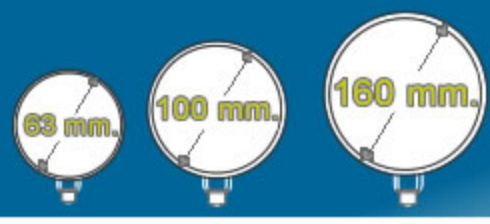

All Stainless Steel Safety Pressure Gauge

MN-P-Sf

Service intended

It is applied to the occasions which must choose the Safety Pressure Gauge with laminated safety glass. It should be used to measure the pressure of the corrosion, non–viscidity and non–cristal gas and liquid, and could be in the strong corrosion occasion.

Dry Type

MN-P-Sf-63
MN-P-Sf-100
MN-P-Sf-160

Liquid Filled

MN-P-Sf-63-..
MN-P-Sf-100-..
MN-P-Sf-160-..

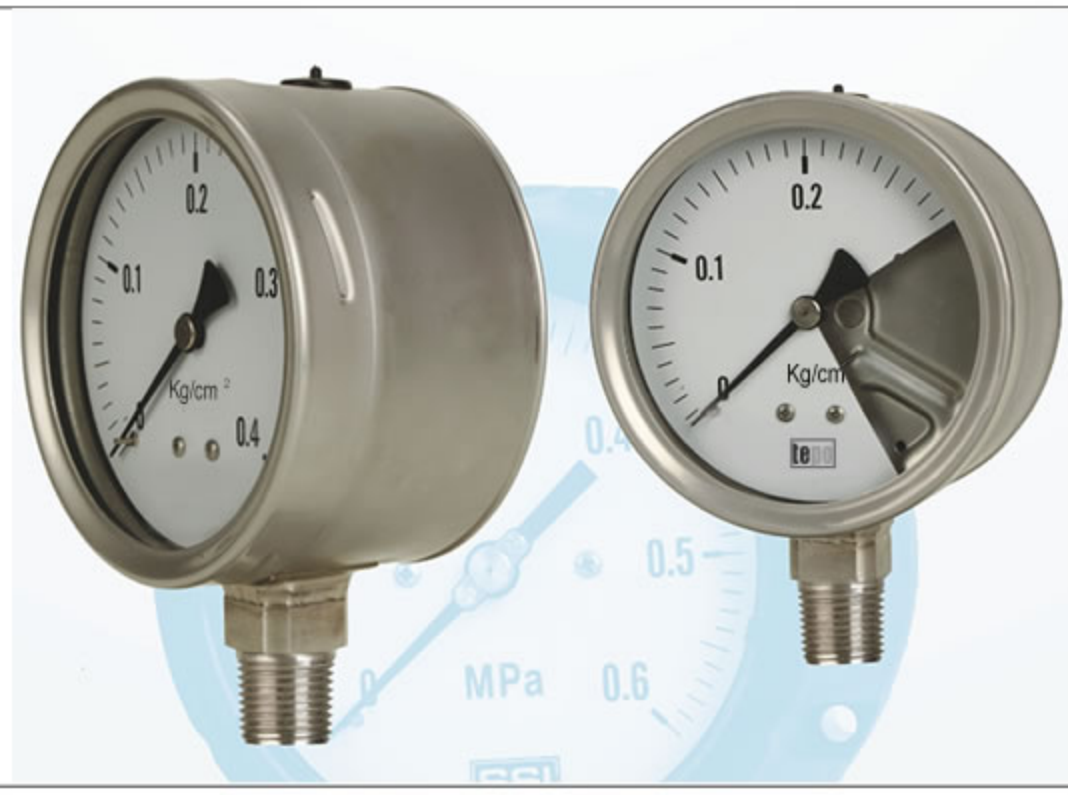

Ranges		
-1~0 Bar	0~0.6 Bar	0~25 Bar
-1~0.6 Bar	0~1 Bar	0~40 Bar
-1~1.5 Bar	0~1.6 Bar	0~60 Bar
-1~3 Bar	0~2.5 Bar	0~100 Bar
-1~5 Bar	0~4 Bar	0~160 Bar
-1~9 Bar	0~6 Bar	0~250 Bar
-1~15 Bar	0~10 Bar	0~400 Bar
-1~24 Bar	0~16 Bar	0~600 Bar
		0~1000 Bar
		0~1600 Bar

Eryaman AVM. 2.Cad.No:11/50 06793 Ankara-TURKEY • Tel: +90 312 279 44 51 • Fax: +90 312 279 55 58 • e-mail: info@teknopoli.com • web: http://www.teknopoli.com

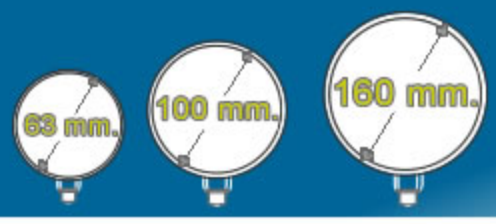

All Stainless Steel Safety Pressure Gauge

MN-P-Sf

Specifications

- Accuracy: Φ63,2.5%, ± 1.6%; Φ100,Φ160, ± 1.6%,1%
- Range:
  63 mm: 0…1 to 0…1000 bar;
  100 mm: 0…0.6 to 0…1000 bar;
  160 mm: 0…0.6 to 0…1600 bar;
- Working pressure:
  63 mm: Steady: 3/4 × full scale value; Fluctuating: 2/3 × full scale value; Short time: 1.2 × full scale value
  100 and 160 mm: Steady: 3/4 × full scale value;
  Fluctuating: 0.9 × full scale value; Short time: 1.3 × full scale value
- Operating temperature: Ambient: –40…+60℃;
  Medium: +200℃ maximum;
  Alternating type: +100℃maximum
- Degree of protection: IP54 per EN 60 529 / IEC 529; Liquid filling type: Ip65
- Socket: AISI 304,
  External thread:Φ63 G1/4", Φ100 、Φ160 G1/2" (other threads are aviaiable)
- Pressure element: AISI 316L
- Liquid filling: Glycerin or dry obturation type, dry (no liquid filled)
- Internals: Stainless Steel
- Dial: White Aluminium with black marks
- Pointer: Black aluminium
- Case: Stainless Steel, Burst disk, pressure blow out back.
- Window: Laminated safety glass

How to Order

Please specify the following properties when the manometer ordering.

- Manometer Model number,
- Dial size,
- Dry or Liquid filled (GD=Glycerin filled, SD=Silicone filled)
- Range and pressure unit
- Panel mounting; Front Flange (FF), Rear Flange (RF),
- Connection type,
- Connection thread,
- Accuracy,
- (If necessary; special scale,contact model..)

For example: *MN-P-Sf-160-(0/150 PSI)-Back-R1/2-1*

Dimensions (mm.)

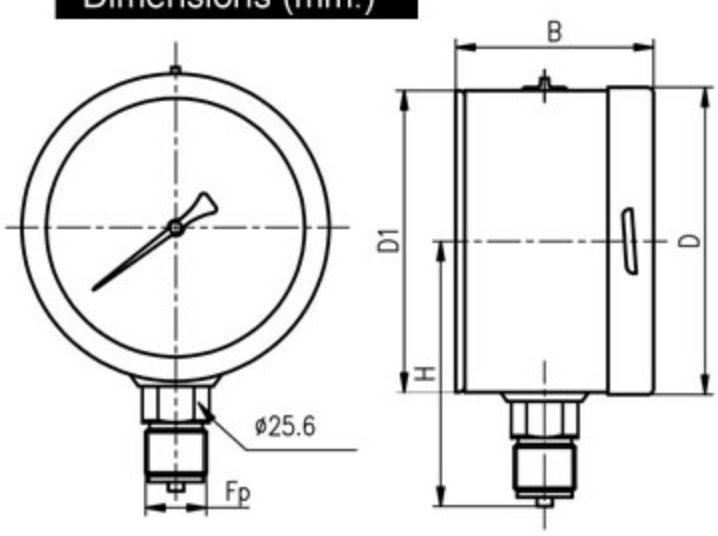

Diameter	D	D1	B	H	Fp
Φ63	64	63	40	62/65	M14 × 1.5/NPT1/4
Φ100	101	100	60	87/90	M20 × 1.5/NPT1/2
Φ160	161	160	75	120/123	M20 × 1.5/NPT1/2

Eryaman AVM. 2.Cad.No:11/50 06793 Ankara-TURKEY • Tel: +90 312 279 44 51 • Fax: +90 312 279 55 58 • e-mail: info@teknopoli.com • web: http://www.teknopoli.com

PP Safety Series Pressure Gauge

MN-PP

MN-PP-S Standart type

MN-PP-P Stainless steel type

Summary

The pressure gauge is applied to the food, drink, refrigeration, petrolchemical processing and so on, and the occasions where both environment and medium are strict. The case is solid with knock down back case and burst disk inside.

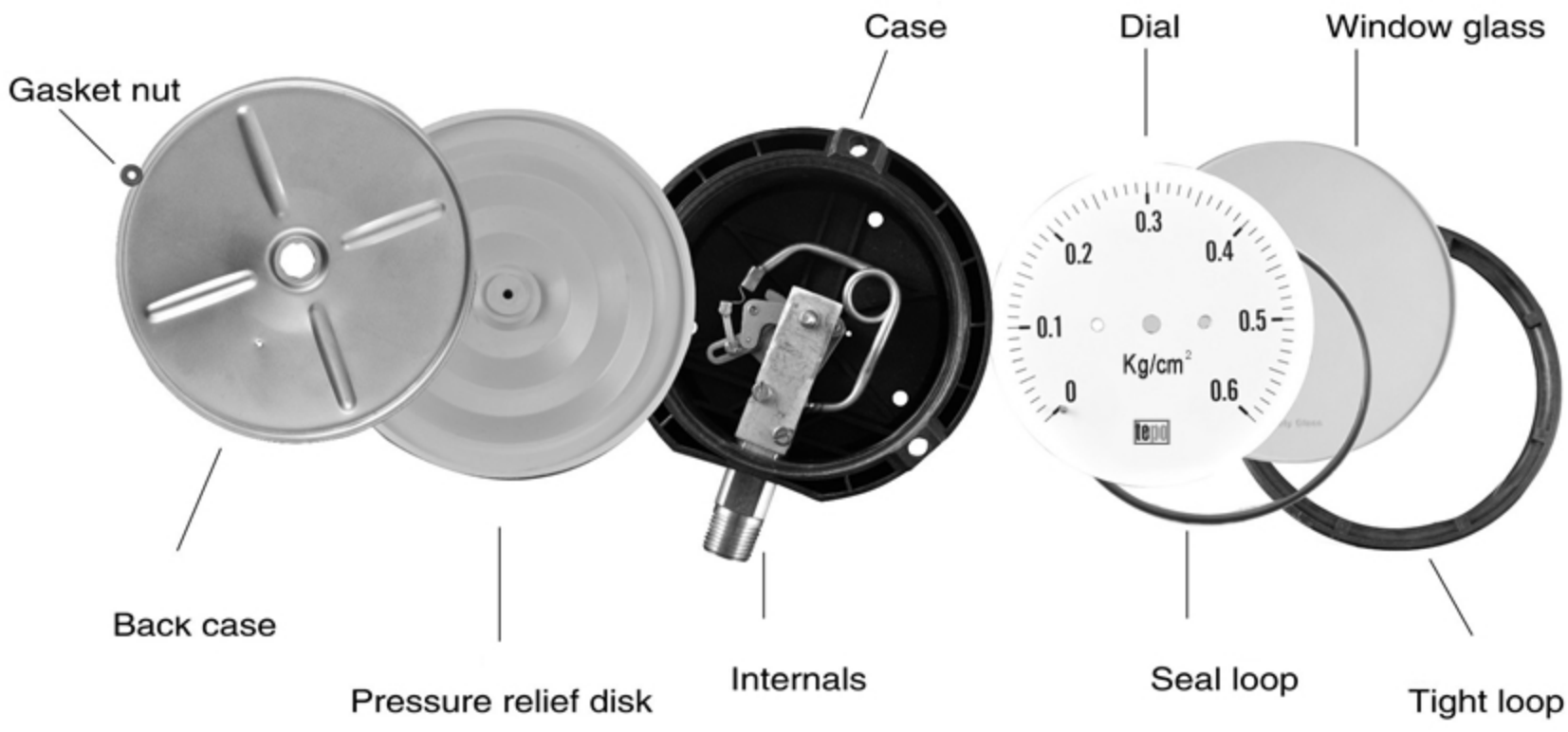

PP Safety Series Pressure Gauge

MN-PP

Specifications

MN-PP-S

- Accuracy: ± 1% (± 0.5% available)
- Range: -1 ~ 0 Bar, 0 ~ 1400 Bar
- Working condition:
  Ambient temperature: –40 ~ +65℃;
  Medium temperature: Max is 100℃
- Temperature effect: Argon–arc welding 400℃
  for short time silver soldering 240℃;
  Soft soldering 65℃;
  The accuracy would change 1.5% by temperature change 40℃.
- Protection: IP65
- Socket material: cooper alloy,stainless steel
  Bourdon tube: P < 60 Bar Copper alloy C–tube;
  P ⩾ 60 Bar stainless steel helical tube.
  welding: Soft soldering, Silver soldering, Argon arc welding
- Connection: 1/2NPT, M20 × 1.5 or others
- Case: Polypropylene, black, burst disk and knock down back case
- Diaphragm: Oil–proof rubber
- Filling plug: Oil–proof rubber
- Dial: White aluminium alloy dials with black letters.
- Pointer: Aluminium alloy, black, null setting
- Window: Glass, 3mm
- Liquid filling: Silicone, Glycerin

MN-PP-P

- Wetted part: Stainless Steel
- Internals: Stainless Steel
- C–tube tie–in welding: Argon–arc welding
- Liquid filling: Silicone
- Others is as MN-PP-S

How to Order

Please specify the following properties when the manometer ordering.

- Model number,
- Dial size,
- Dry or Liquid filled (GD=Glycerin filled, SD=Silicone filled)
- Range and pressure unit,
- Connection type,
- Connection thread,
- Accuracy,
- If necessary; special scale,..

For example: *MN-PP-P-(0/15 PSI)-Bottom-R1/2-1*

PP Safety Series Pressure Gauge

MN-PP

Dimensions (mm.)

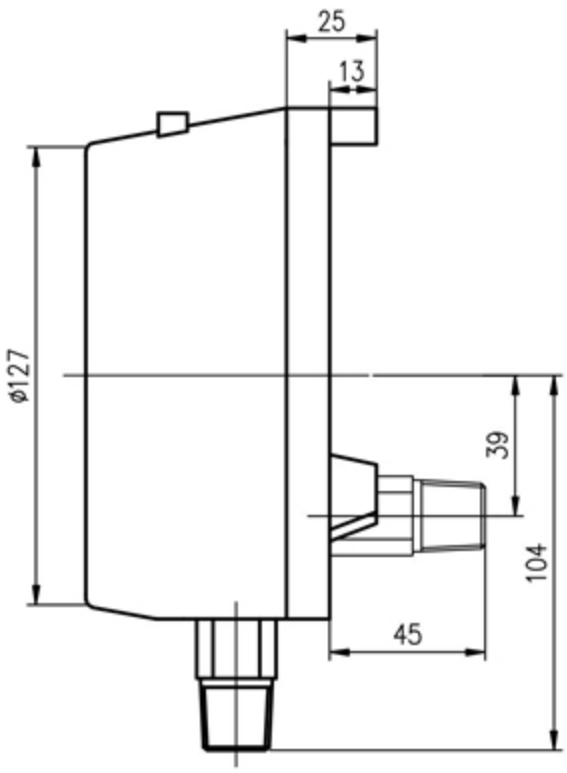

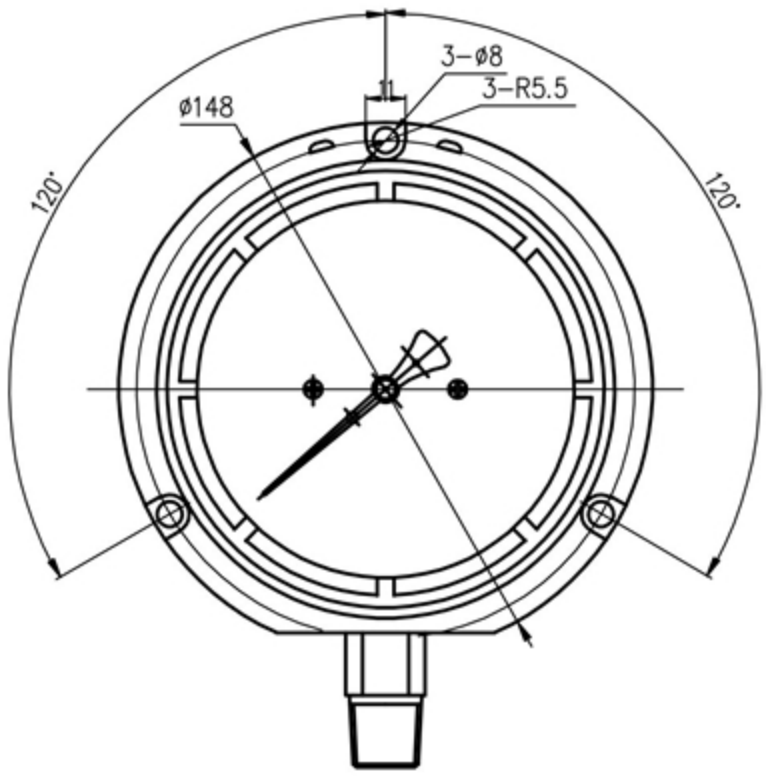

TABLE OF RANGES					
-1~0 Bar	-1~15 Bar	0~6 Bar	0~25 Bar	0~160 Bar	0~1000 Bar
-1~0.6 Bar	-1~24 Bar	0~7 Bar	0~30 Bar	0~250 Bar	0~1100 Bar
-1~1.5 Bar	0~1 Bar	0~10 Bar	0~40 Bar	0~300 Bar	0~1200 Bar
-1~3 Bar	0~1.6 Bar	0~15 Bar	0~50 Bar	0~350 Bar	0~1300 Bar
-1~5 Bar	0~2.5 Bar	0~16 Bar	0~60 Bar	0~400 Bar	0~1400 Bar
-1~9 Bar	0~4 Bar	0~20 Bar	0~100 Bar	0~600 Bar	

Eryaman AVM. 2.Cad.No:11/50 06793 Ankara-TURKEY • Tel: +90 312 279 44 51 • Fax: +90 312 279 55 58 • e-mail: info@teknopoli.com • web: http://www.teknopoli.com

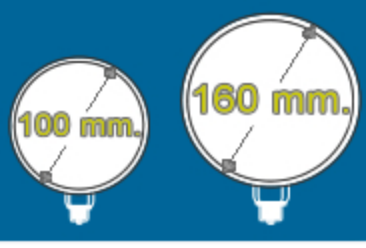

Capsule Pressure Gauge

KMN-S
KMN-P

Product overview

Capsule gauges are sensitive instruments used in low pressure applications typically not exceeding 600 mBar. It is used in a wide range of applications including medical, heating,gas pipe–lines, burners, air–conditioner and many others. The standard low–pressure capsule gauges are designed to measure the low pressure of gas that does not corrode the copper alloy. This gauge series features a copper alloy capsule and socket. Suitable for accurate measuring the low pressure of corrosive gas or fluid in corrosive environment. This gauge series features a AISI 316 capsule and socket. With the proven manufacturing experience, our low pressure capsule gauges are well–known for their unique designing feature, dependable performance and wide applications.

Features

- KMN-S standard, KMN-P stainless steel corrosion–proof, suitable for various applications;
- Available from Φ100 to Φ160 with different mountings;
- 4 styles: outside bayonet, close bayonet, polystyrene twist–on window;
- Positive, negative, compound pressure ranges, minimum range is 2,5 mBar ~600 mBar
- A variety of options

How the Capsule Gauge Works

Capsule gauges use the diaphragm capsule as the sensing element for pressure measurement. The diaphragm capsule is an elastic metal sensing element comprised of two thin wall diaphragms whose sides are soldered together to the capsule. Whenever air, gas enters the intake port (gauge connection), it travels into the diaphragm capsule.
The walls of the capsule expand and contract in response to the change in pressure. This change is then transferred to a rotating rod and arm that rest on the outside of the capsule.The rotating rod is connected to a geared movement through a linkage system. Connected to a shaft, this system then drives the pointer over a dial marked in appropriate pressure or vacuum units to provide a pressure reading.

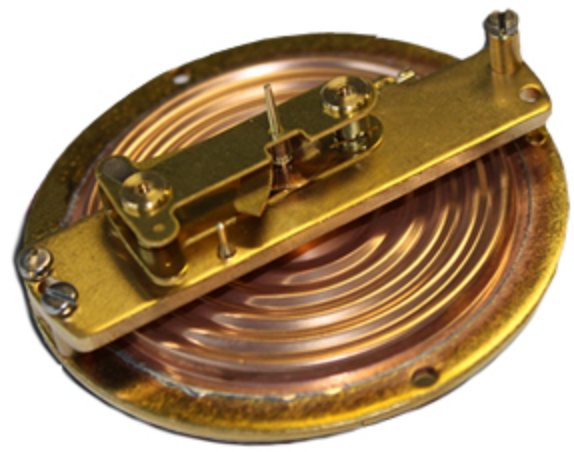

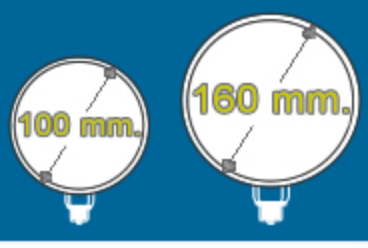

Capsule Pressure Gauge

KMN-S
KMN-P

✦ (Inner bayonet) standard capsule low pressure gauge

KMN-S

✦ (Inner bayonet) SS capsule low pressure gauge

KMN-P

Specifications

- Executive Standard: EN 837-3
- Instruments Diameter: 100mm;160mm
- Accuracy Class: 2.5% (1.6% optional)
- Range: (see range table)
- Protection Class: Ip54
- Ambient temperature: –25℃ ~ 55℃
- Connection thread: R 1/2", 1/2" NPT, (M20X1.5) others see the table
- Instrument case: KMN-S standard ST13 black; KMN-P stainless steel corrosion proof AISI 304 nature color
- Instrument socket: KMN-S standard copper alloy plated; KMN-P corrosion proof AISI 316 nature color (22mm square stainless steel)
- Measurement Elements: KMN-S standard copper alloy double diaphragm tin welding; KMN-P stainless steel Corrosion proof AISI 316 welding and lasing welding.
- Movement: KMN-S standard copper alloy, KMN-P corrosion proof stainless steel, all with micro adjustment device (without zero adjustment option)
- Window: 3mm instrument plain glass
- Dial: Aluminium, white with black scales (special dial available)

How to Order

Please specify the following properties when the manometer ordering.

- Model number,
- Dial size,
- Range and pressure unit,
- Panel mounting; Front Flange (FF), Rear Flange (RF)
- Connection type,
- Connection thread,
- Accuracy,
- (If necessary; special scale,..)

For example: *KMN-S-100-(0/10 mBar)-FF-Bottom-R1/2-1.6*

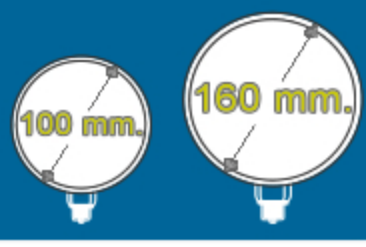

Capsule Pressure Gauge

KMN-S
KMN-P

Feature	Internals	Type
Bottom Connection directly mounting 100mm 160mm	Copper alloy Stainless steel	KMN-S-100-Bottom KMN-S-160-Bottom KMN-P-100-Bottom KMN-P-160-Bottom
Center Back Connection directly mounting 100mm 160mm	Copper alloy Stainless steel	KMN-S-100-Back KMN-S-160-Back KMN-P-100-Back KMN-P-160-Back
Bottom Connection with front flange 100mm 160mm	Copper alloy Stainless steel	KMN-S-100-FF-Bottom KMN-S-160-FF-Bottom KMN-P-100-FF-Bottom KMN-P-160-FF-Bottom
Center Back Connection with front flange 100mm 160mm	Copper alloy Stainless steel	KMN-S-100-FF-Back KMN-S-160-FF-Back KMN-P-100-FF-Back KMN-P-160-FF-Back

Eryaman AVM. 2.Cad.No:11/50 06793 Ankara-TURKEY • Tel: +90 312 279 44 51 • Fax: +90 312 279 55 58 • e-mail: info@teknopoli.com • web: http://www.teknopoli.com

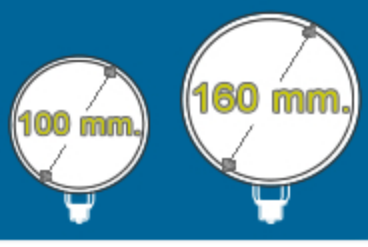

Capsule Pressure Gauge

KMN-S
KMN-P

Dimensions (mm.)

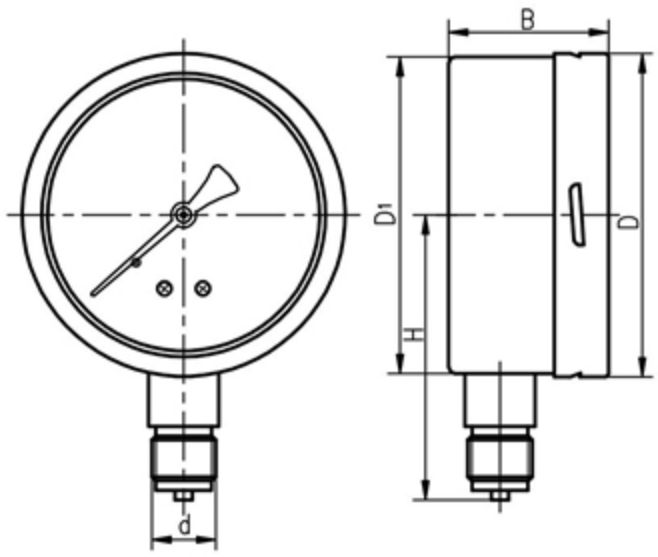

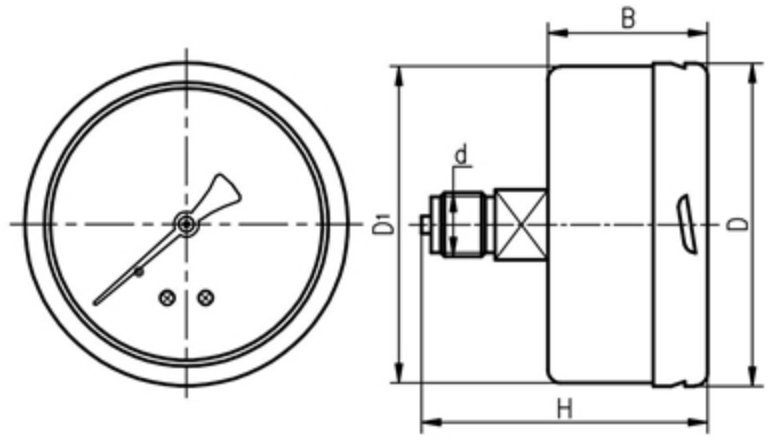

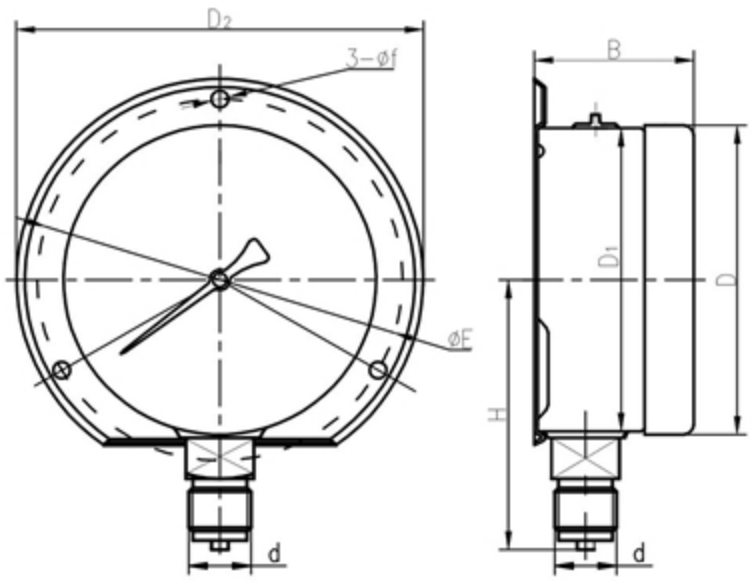

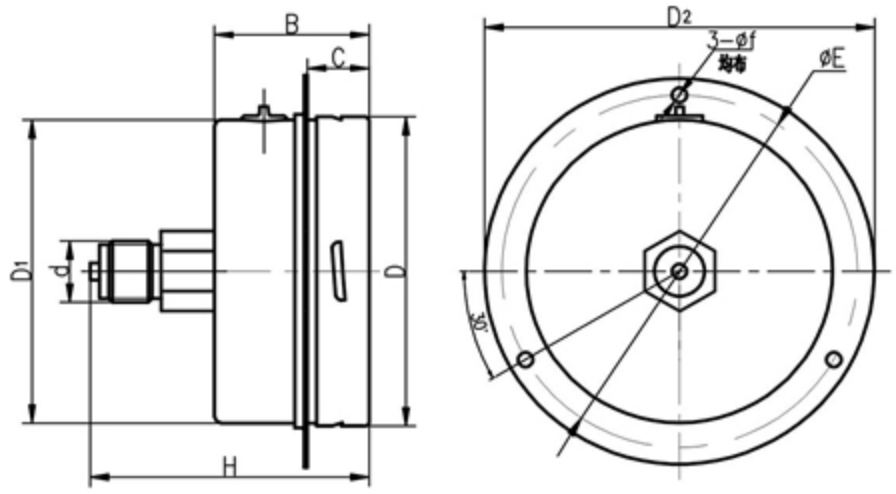

Diameter	D	D1	B	C	H	d	D2	E	f
Φ100	101	99	50		89/86	M20 X 1.5/NPT1/2	131.5	118	5.5
Φ100	101	99	50	18	92/89	M20 X 1.5/NPT1/2	128	118.5	5
Φ160	160	159	50		202/199	M20 X 1.5/NPT1/2	196	178	6
Φ160	160	159	50	20	202/199	M20 X 1.5/NPT1/2	196	178	6

Eryaman AVM. 2.Cad.No:11/50 06793 Ankara-TURKEY • Tel: +90 312 279 44 51 • Fax: +90 312 279 55 58 • e-mail: info@teknopoli.com • web: http://www.teknopoli.com

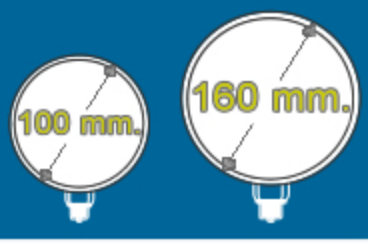

Vibration-Proof Capsule Pressure Gauge

KMN-S
KMN-P

KMN-P-100-..

KMN-P-160-..

Specifications

- Executive Standard: EN 837-3
- Instruments Diameter: 100mm; 160mm
- Accuracy Class: 2.5%
- Range: 2.5 ~ 1000 mBar
- Protection Class: Ip65
- Ambient Temperature: –40℃ ~ +60℃
- Connection thread: R 1/2", 1/2" NPT, (M20X1.5) others see the table
- Instrument case: AISI 304 stainless steel nature color (option: polished case)
- Instrument socket: AISI 316 nature color (22mm stainless steel square) Socket welded to case by argon–arc welding
- Measurement Elements: Stainless Steel AISI 316 double diaphragm plasma welding, laser welding.
- Movement: Stainless steel, micro–adjustment
- Window: 4mm instrument plain glass (organic glass optional)
- Oil filled: silicone oils

How to Order

Please specify the following properties when the manometer ordering.

- Model number,
- Dial size,
- Dry or Liquid filled (GD=Glycerine filled, SD=Silicone filled)
- Range and pressure unit,
- Panel mounting; Front Flange (FF), Rear Flange (RF)
- Connection type,
- Connection thread,
- Accuracy,
- (If necessary; special scale,..)

For example: *KMN-P-100-SD-(0/100 mBar)-Bottom-R1/2-2.5*

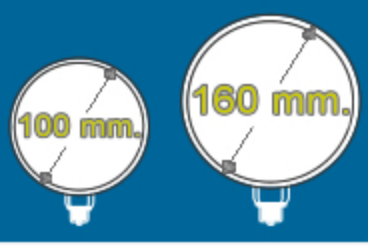

Vibration-Proof Capsule Pressure Gauge

KMN-S
KMN-P

Option Type	Basic Type
Φ100 outer diameter Stainless steel, vibration–proof low pressure gauge	KMN-P-100-..
Φ160 outer diameter Stainless steel, vibration–proof low pressure gauge	KMN-P-160-..

TABLE OF RANGES										
2.5 mBar	5 mBar	10 mBar	16 mBar	20 mBar	25 mBar	40 mBar	50 mBar	60 mBar	100 mBar	150 mBar
160 mBar	200 mBar	250 mBar	300 mBar	400 mBar	500 mBar	600 mBar	1 Bar			
-2,5 mBar	-5 mBar	-10 mBar	-16 mBar	-20 mBar	-25 mBar	-40 mBar	-50 mBar	-60 mBar	-100 mBar	-150 mBar
-160 mBar	-200 mBar	-250 mBar	-300 mBar	-400 mBar	-500 mBar	-600 mBar	-1 Bar			

Dimensions (mm.)

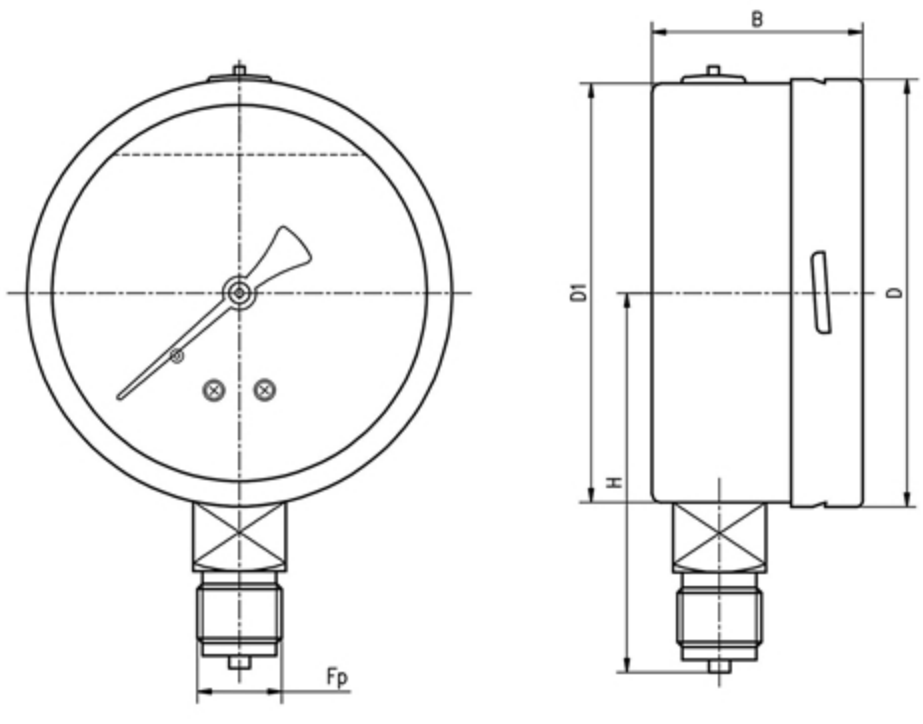

Type code	D	D1	B	H	Fp
KMN-P-SD-100	101	99	50	89/86	M20 x 1.5/NPT1/2
KMN-P-SD-160	161	159	50	122/119	M20 x 1.5/NPT1/2

Eryaman AVM. 2.Cad.No:11/50 06793 Ankara-TURKEY • Tel: +90 312 279 44 51 • Fax: +90 312 279 55 58 • e-mail: info@teknopoli.com • web: http://www.teknopoli.com

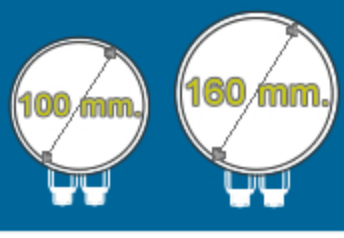

Double Bourdon Differential Pressure Gauge

FMN-B

Product overview

Double bourdon system differential pressure gauges are designed to measure difference between 2 pressures. 2 models available: FMN-B-S General available and FMN-B-P Corrosion–Proof. The FMN-B-S type is suitable to measuring the uncorrode medium and the FMN-B-P type could be used in corrode environments.

The instrument has 2 independent measuring systems. The measured pressure deflects the elastic elements, displacements then take place to actuate gear mechanisms through linkages to carry 2 pointers traveling over instrument dial, and an auxiliary dial shows the pressure difference.

FMN-B-S
Standart type Double bourdon tubes Differential Pressure gauge

FMN-B-P
Corrosion-proof type Double bourdon tubes Differential Pressure gauge

How to Order

Please specify the following properties when the manometer ordering.

- Model number,
- Dial size,
- Dry or Liquid filled (GD= Glycerin filled, SD= Silicone filled)
- Range and pressure unit
- Panel mounting; Front Flange (FF), Rear Flange (RF),
- Connection thread,
- Accuracy,
- (If necessary; special scale,..)

For example: *FMN-B-P-100-(0/1 Bar)-R1/2-1.6*

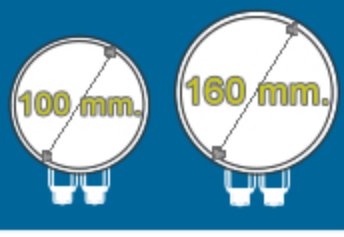

Double Bourdon Differential Pressure Gauge

FMN-B

Technical Specifications

FMN-B-S

- Accuracy: ± 1.6%
- Ranges: 1…… 100 Bar
- Ambient temperature: –20 ~ +60℃
- Media temperature: less than 60℃
- Mounting: bottom directly mounting (with front or back flange available)
- Process connection: M20X1.5, G1/2",1/2" NPT, G3/8", 3/8" NPT
- Protection class: IP45
- Connection material: copper alloy
- Bourdon tube: copper alloy
- Welding: Tin–welding
- Case material: AISI 304
- Sealing circle and blow out vent material: rubber
- Window: 3mm plain glass (Organic or double layers available)
- Movement: copper alloy
- Pointer: aluminium, black and red color
- Dial: Aluminium, white with black letters (Special dial available)

FMN-B-P

- Connection material: AISI 304
- Bourdon tube: AISI 316
- Welding: AISI 316 TIG Argonarc
- Movement: Stainless Steel
- Media temperature: 100℃
- Case material: Stainless Steel 304
- Others as FMN-B-S

TABLE OF RANGES		
0~1 Bar	0~6 Bar	0~40 Bar
0~1.6 Bar	0~10 Bar	0~60 Bar
0~2.5 Bar	0~16 Bar	0~100 Bar
0~4 Bar	0~25 Bar	

Note: Accuracy is ± 2.5 to 0~1 Bar

Eryaman AVM. 2.Cad.No:11/50 06793 Ankara-TURKEY • Tel: +90 312 279 44 51 • Fax: +90 312 279 55 58 • e-mail: info@teknopoli.com • web: http://www.teknopoli.com

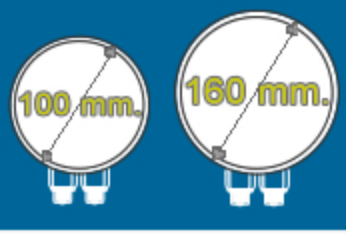

Double Bourdon Differential Pressure Gauge

FMN-B

Dimensions (mm.)

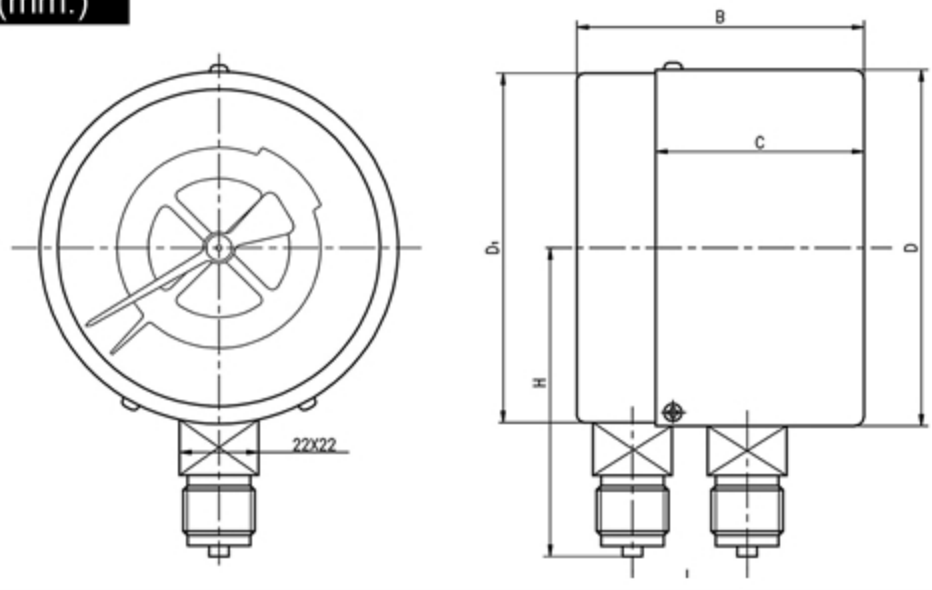

Type code	D	D1	B	C	H	L
FMN-B-S-100	101	99	80	58	87.5	32
FMN-B-P-160	159	157	82	76	146	32

Mounting

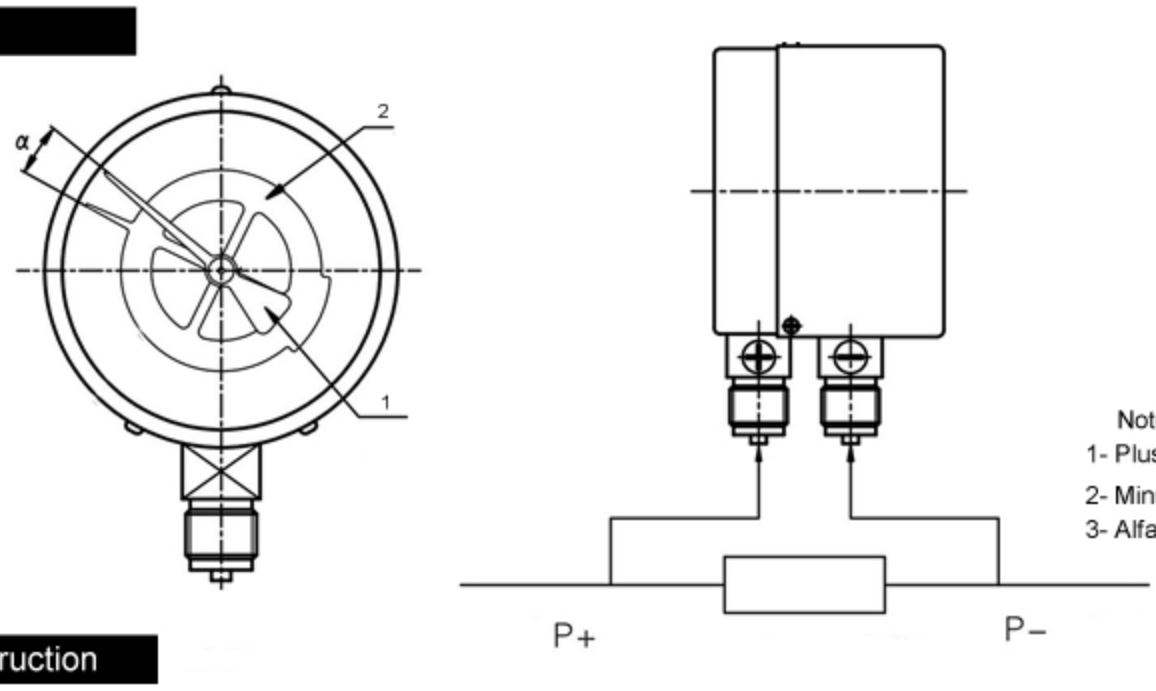

Notes;
1- Plus (High) pressure red pointer
2- Minus (Low) pressure dial pointer
3- Alfa is DP value

Operating Instruction

- The highest indicated value is the highest pressure permitted.
- We advice using the 1/2~1/3 of the range as ΔP. It is not convenient to read if it is too small. ΔP should not lower than 1/10 of full scale value.
- The red pointer shows the plus pressure (the pressure input); the dial pointer shows the minus pressure (the pressure output). The value could be saw by the angle α between the red and dial pointers (see directly on the dial pointer). And we can compute the difference using the pointed values of the red pointer and the dial pointer (△P =P+ — P−)
- It is suitable to measure gas and liquid medium, suggested in room in −20℃~60℃.
- The general lowest range is 1,6 Bar . It is could be made to 2.5% if range is 1 Bar requested.
- While mounting, the ⊕ end should be deployed with pressure input terminal and the ⊖ end should be deployed with pressure output terminal

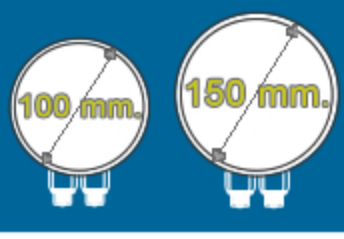

Double Diaphragm DP Gauge

FMN-D

Product overview

Mainly used for measuring the difference between two pressure values, in the plus and minus ends of filter, the level of liquid, the entrance and exit of pump, oil pipeline, gas pipeline and high pressure pump station and so on. It is excellent while overpressure take place, also suitable corrosion environments.

FMN-D

Standart type Double diaphragm
Differential Pressure gauge

FMN-D-..-

Vibration-proof type Double diaphragm
Differential Pressure gauge

Feature

- Static pressure: 100 Bar
- Vibration–proof type
- Capillary diaphragm
- Many mounting type

How to Order

Please specify the following properties when the manometer ordering.

- Model number,
- Dial size,
- Dry or Liquid filled (GD= Glycerin filled, SD= Silicone filled)
- Range and pressure unit
- Connection thread,
- Accuracy,
- (If necessary; special scale,..)

For example: *FMN-D-GL-100-(0/1 Bar)-R1/2-1.6*

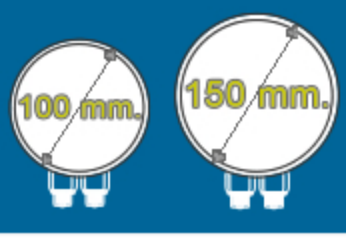

Double Diaphragm DP Gauge

FMN-D

Technical Specifications

- Accuracy: ± 1.6%, ± 2.5% (1.6% available if range above 1 Bar)
- Window: laminated safe glass
- Pointer: zero adjustable black aluminium pointer
- Case: 100, 150 airtight type dry gauge (oil filled available)
- Protection: IP65
- Diaphragm material: 316L (for negative pressure); 316 Ti (for positive pressure)
- Process connection: 316
- Case material: 304SS
- Movement: stainless steel 304
- The material of blow out vent and filling plug: oil resistant rubber
- Steady: full scale value
- Fluctuating: 0.7XFS
- Overpressure protection: both ends support 100 Bar
- Operate temperature: – 20℃ ~ 60℃
- Thermal drift: ± 0.8% every ± 10℃ of media temperature
- Range: detail in range table
- Connection: M20 × 1.5, G1/2", NPT1/2, NPT1/4 thread inside (without 3–way manifold) or capillary connection, capillary threaded connection,diaphragm capillary flanged connection (mainly used in viscous medium or diaphragm in special materials).
- Dial: aluminium, white with black letters (can be made as required). The instrument should be used with 3–way manifold group or 5–way manifold.
- Oil filling: oil filled available

TABLE OF RANGES		
0~0,16 Bar	0~1 Bar	0~4 Bar
0~0,4 Bar	0~1,6 Bar	0~6 Bar
0~0,6 Bar	0~2,5 Bar	
other ranges please contact us		

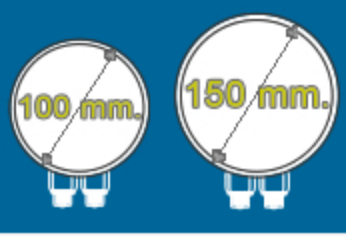

Double Diaphragm DP Gauge

FMN-D

Dimensions (mm.)

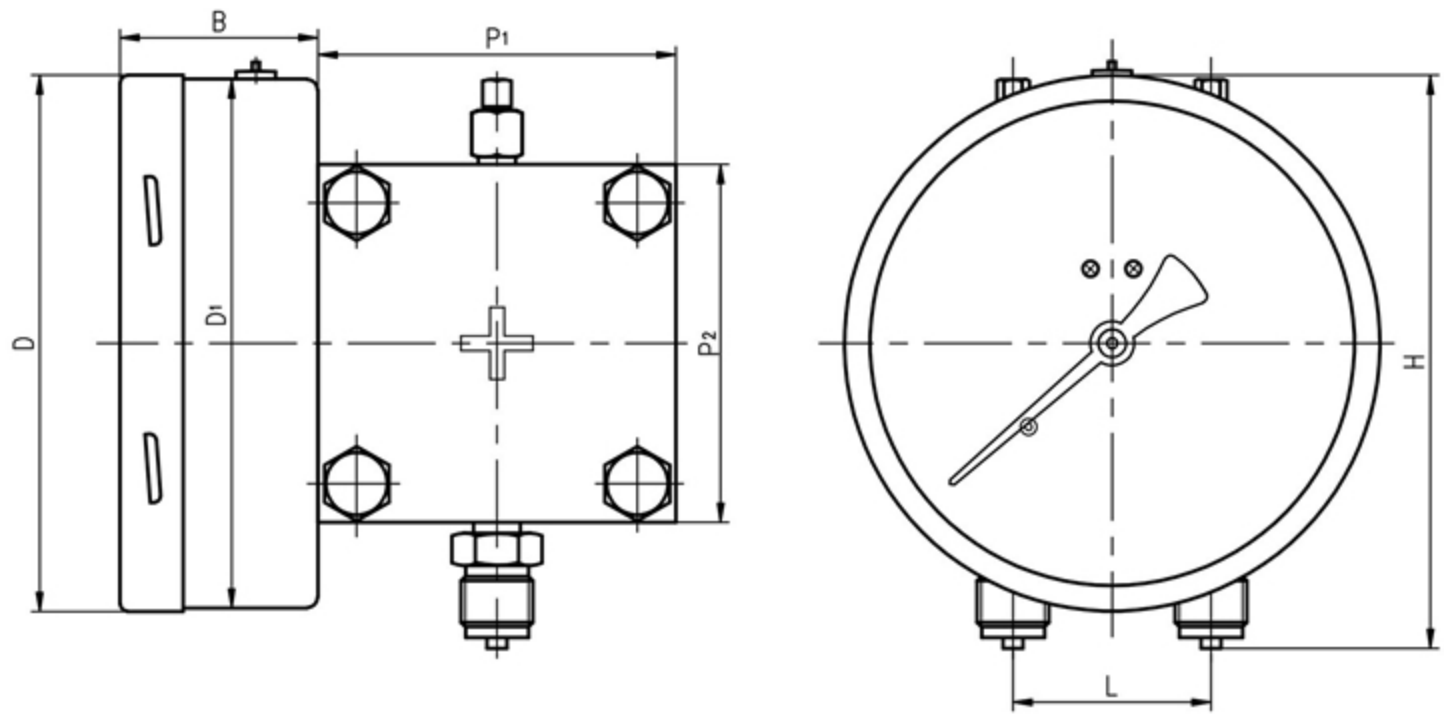

Type code	mm					
	D	D1	B	H	P_1/P_2	L
FMN-D–100	111	97	51	141	100	54
FMN-D–150	149	147	55	158	100	54

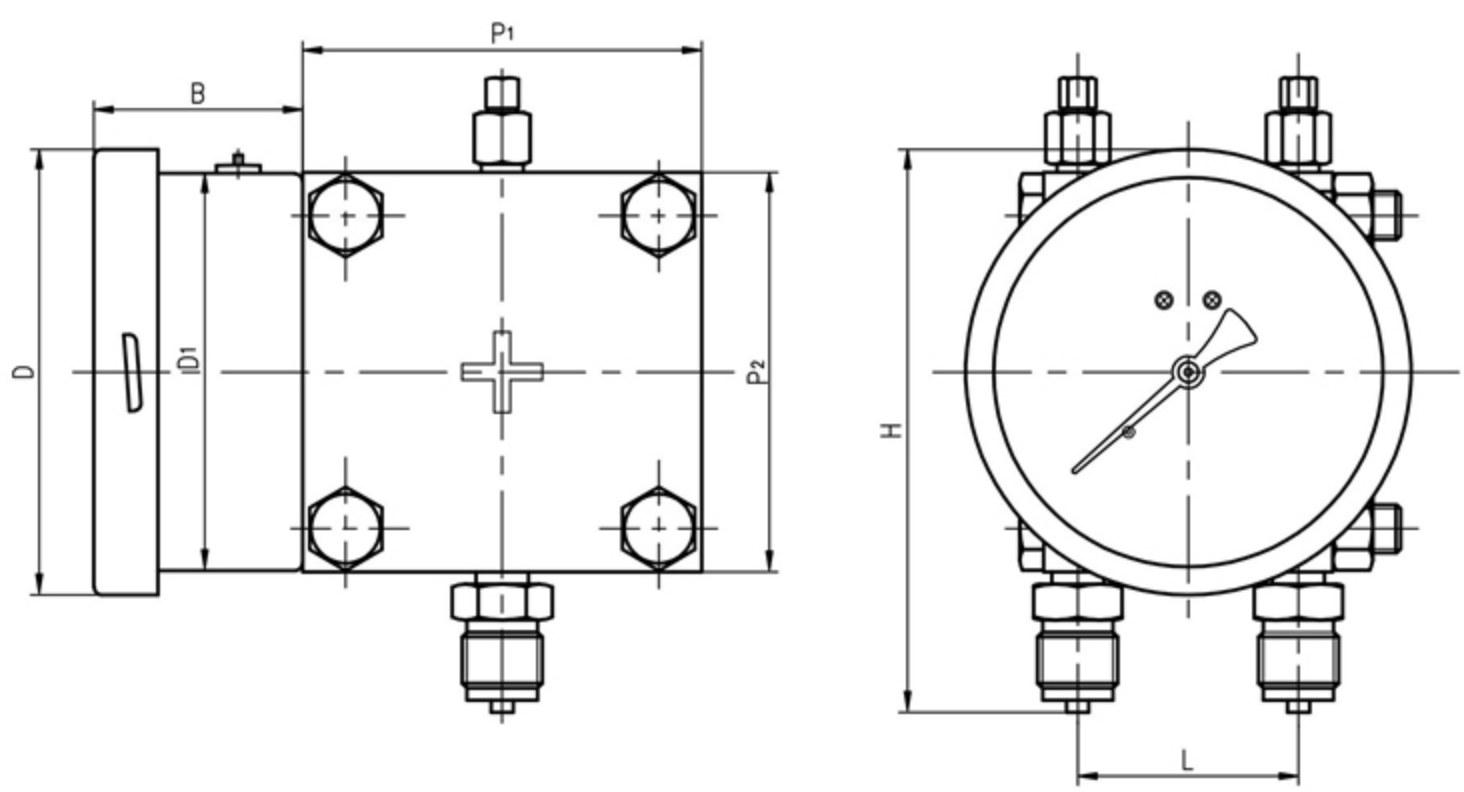

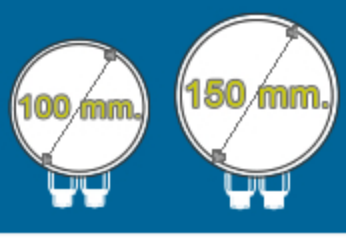

Double Diaphragm DP Gauge

FMN-D

Dimensions (mm.)

Back mounting

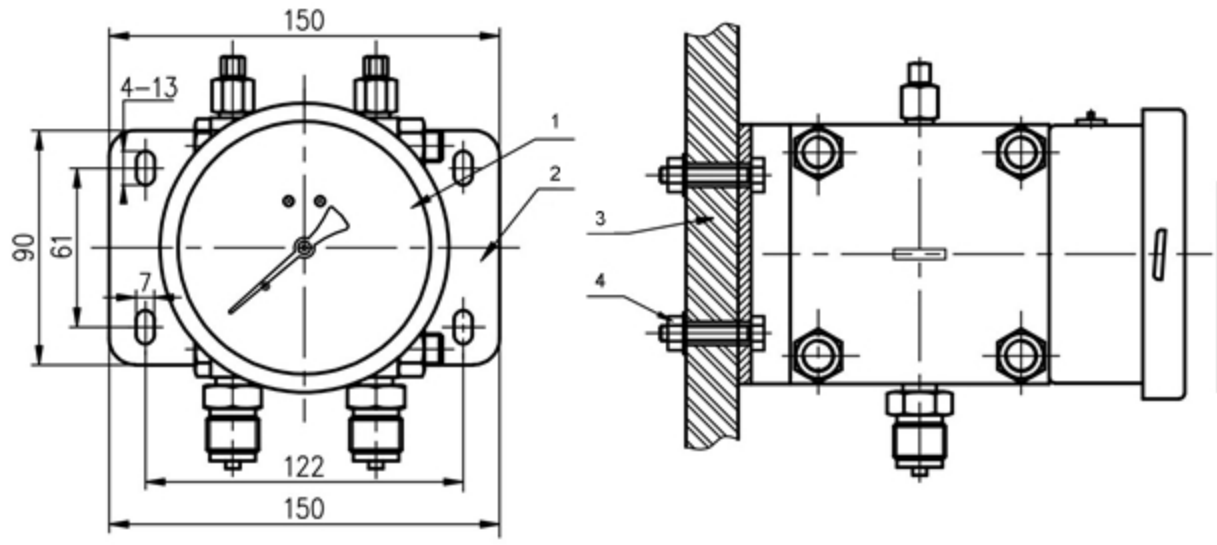

① DP gauge
② Back mounting plate
③ Steady rest mounting
④ Mounting bolts

Note:
1. back mounting fit for plate mounting (instrument plate, and outer surface etc)
2. Make sure the plane and differential gauge are tight, which will not mount the fall off
3. Special back plate available as per request.

Steady rest mounting

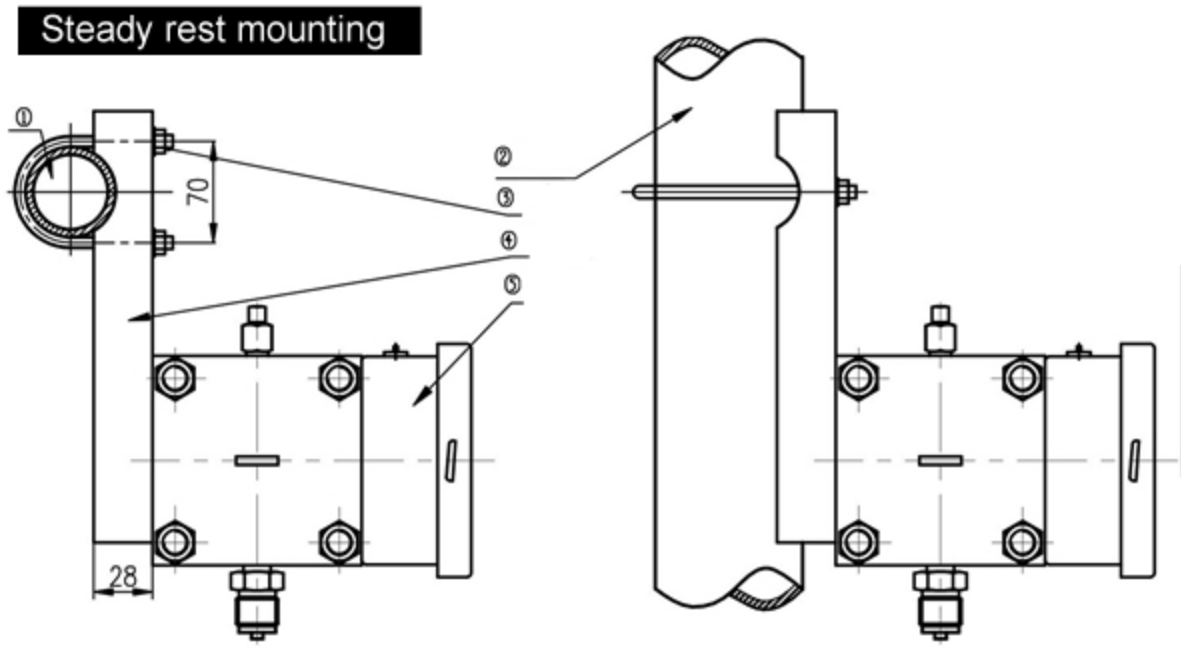

② pipe clamp
③ Steady rest mounting
④ Differential pressure gauge
⑤ vertical pipe

Note:
1. Steady rest mounting is suitable for pipe (horizontal or vertical)
2. Outer diameter of pipe cannot over 60mm.

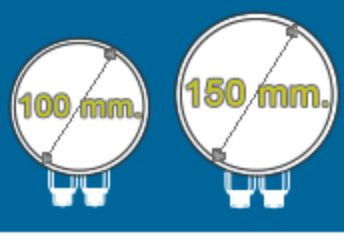

Double Diaphragm DP Gauge

FMN-D

Three Valves mounting

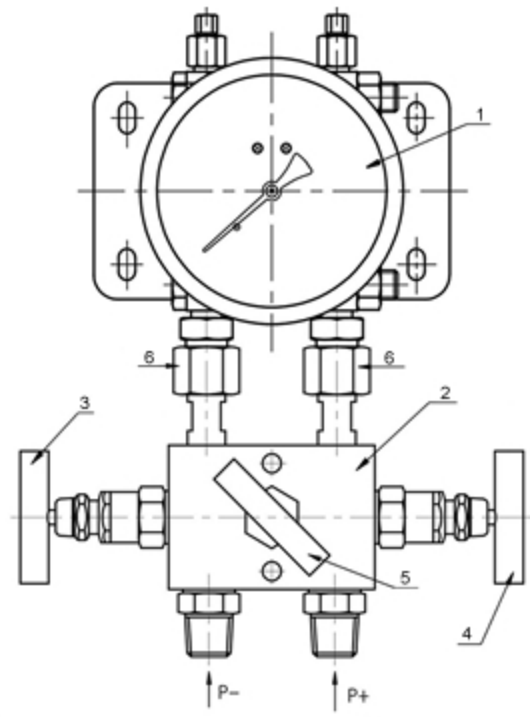

①Differential pressure gauge
②3–way manifolds
③negative pressure valve
④positive pressure valve
⑤middle valve
⑥nuts

1. Use differential gauge must fit out three valves in order to insure its normal working.
2. The differential gauge and there valves are connected by two nuts tightly, nuts and socket are with PTFE spacer.
3. Open the middle valve, negative pressure valve and positive pressure valve before use the differential gauge, when either of P– or P+ input, the middle valve can have equilibrium activity, and avoid to damage the gauge.
4. When P– and P+ normal input the three valves, then close the middle valve, to make the gauge works right. If the gauge's pointer is not at zero, please adjust it to zero (note must use soap water to inspect the seal, if has leak, please tight.)
5. The differential pressure gauge has back plate mounting (see the chart) and standpipe fixed (the pipe with clamp).

Disassembly

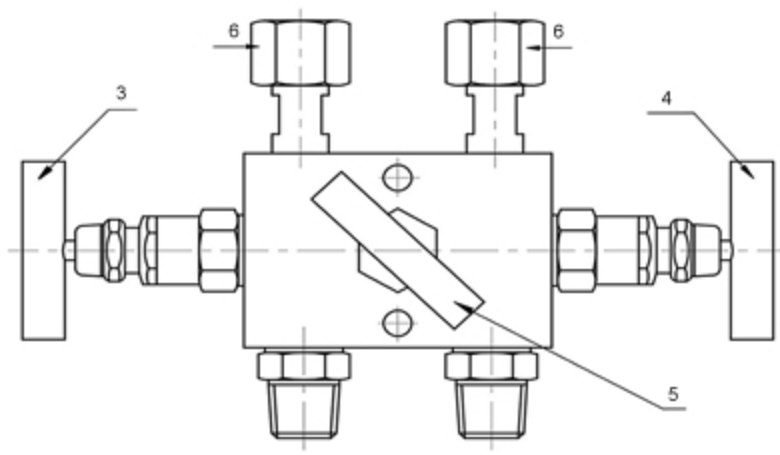

1. Open the middle valve, negative pressure valve and positive pressure valve (Negative pressure valve and positive pressure valve original state is open)
2. Close these two input valves (on the main pipe of equipment).
3. Discharge instrument (discharge two nuts), use spanner lock the socket of gauge, and just discharge the nuts on three valves Discharge pressure, then put off the nuts and clamp.
4. Screw down the two nuts and take down the differential pressure gauge (note screw down these two nuts together)
5. Then install the new gauge (same as mounting method), change two spacers to ensure it will not leak.
6. Fix the clamp.
7. Open main switch (two), then close the middle valve. (use soap water to inspect leak)
8. Two minutes later, set the pointer at zero (if it is at zero, you needn't to adjust).

Test Pressure Gauge

MN-T

Product overview

The test pressure gauge can be used to check common pressure gauge which is using in the industry process, and it can be used directly to do high precision measuring.

MN-T-S type test pressure gauge can work perfectly in the occasion without corrosion to copper alloy.

MN-T-P type can work in varies corrosion environments to do high precision measurement in the corrupt medias.

Product display	Type	Code	Accuracy
MN-T Standart type	Bottom Connection Standard Type	MN-T-S-160	B (±0.25%) C (±0.4%)
MN-T Stainless Steel	Bottom Connection Stainless steel corrosion–proof type	MN-T-P-160	B (±0.25%) C (±0.4%)

Test Pressure Gauge

MN-T

Technical specifications

MN-T-S

- Accuracy: ± 0.25%; ± 0.4%
- Range: 1 to 600 **Bar**
- Burdon tube: 60 **Bar** –to– tin welding between phosphor bronze C–type burdon tube and brass.
- Movement: Copper alloy
- Connection: M20x1.51 (M) (Other standard connections available)
- Case: Steel case with black painted
- Dial: White aluminum, black scale line
- Pointer: 65Mo, Steel, knife end

MN-T-P

- Burdon tube/socket: 0– 60 **Bar** argonarc welding between stainless **100-600 Bar** argonarc welding between stainless steel helical tube and stainless steel socket.
- Case:**AISI** 304 stainless steel
- Other features as **MN-T-S**

How to Order

Please specify the following properties when the manometer ordering.

- Model number,
- Dial size,
- Range and pressure unit,
- Connection type,
- Connection thread,
- Accuracy,
- If necessary; special scale,..

For example: MN-T-S-160-(0/25 Bar)-Bottom-R1/2-0.25

Dimensions (mm.)

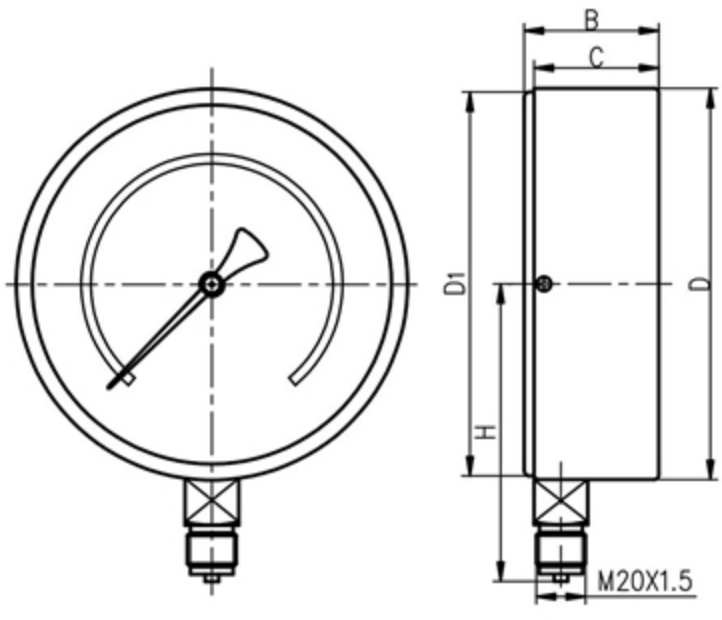

Type code	D	D1	B	C	H
MN-T	160	157	55	51	122

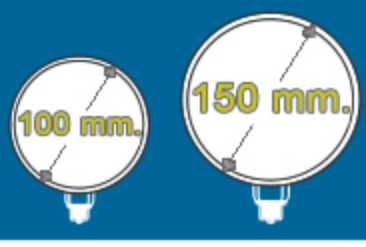

Electric Contact Pressure Gauge

MK-MN

Product overview

Electric contacts pressure gauge is widely used to petrochemical, chemical, metallurgical electric power fields and so forth or applied to measurement pressure of fluid medium in the machine.

Usually ,electric contact pressure gauge matches with relevant electrical apparatus,for instance,relay and contactor.

The instrument is consisted of measurement system,indicating system,electric contact parts system, case, adjustment system, junction box (socket) and otherwise.

The principle is that under the conditions of medium pressue, bourdon tube will show the measured value in the dial by gear wheel equipment . In the meanwhile, the pointer of instrument will make dynamic contact touch or cut with static one (upper limits or lower limits),leading to the cut and turn–on of control system for the purpose of automatic control and alarm.

Standard snap–action electric contact pressure gauge

Electrical specifications

Contact Arrangement	
Function	Type Number
N.A.	01
N.K.	02
N.A.+ N.A.	11
N.A.+N.K.	12
N.K.+N.A.	21
N.K.+N.K.	22

How to Order

Please specify the following properties when the manometer ordering.

- Contact principle,
- Model number,
- Dial size,
- Range and pressure unit,
- Panel mounting; Front Flange (FF), Rear Flange (RF)
- Connection type,
- Connection thread,
- Accuracy,
- If necessary; Special scale,Diaphragm seals,..
- Contact type

For example: *MK-MN-S-150-(0/60 Bar)-RF-Bottom-R1/2-1.6-12*

Eryaman AVM. 2.Cad.No:11/50 06793 Ankara-TURKEY • Tel: +90 312 279 44 51 • Fax: +90 312 279 55 58 • e-mail: info@teknopoli.com • web: http://www.teknopoli.com

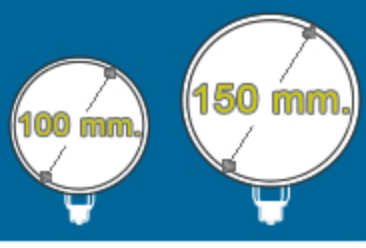

Electric Contact Pressure Gauge

MK-MN

Mounting	For snap–action electric contact pressure gauge	
Lower mounting direct	Φ100mm diameter Φ150mm diameter	
Back mounting direct	Φ100mm diameter Φ150mm diameter	
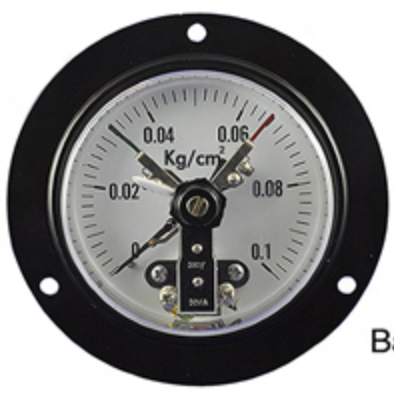 Back embedded mounting	Φ100mm diameter Φ150mm diameter	
Maximum voltage	AC 380V or DC 220V	
Maximum current	0.7A	1A
Contact power	10VA	30VA
Control mode: Upper lower limits contacts (unless two upper or lower limits specificd)		

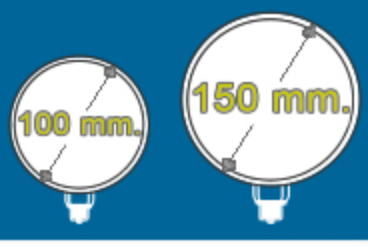

Electric Contact Pressure Gauge

▶ MK-MN

◆ Snap–action Electric Contact with Diaphragm Seal

Normal electric contact gauges combine with a separator (diaphragm seal),being electric contact diaphragm pressure gauge, accommodates strongly corrosive media, viscous & crystallographic media.

Model remark:Model of electric contact + Model of chemical seals.

Wiring scheme

YX	Electric Contact Pressure Gauge
M	Power Generator
JA	Contactor & Its Contacts
JB	Medium relay & Its Contacts
K	Combination switch
L	Indicating Lamp
RD	Fuse

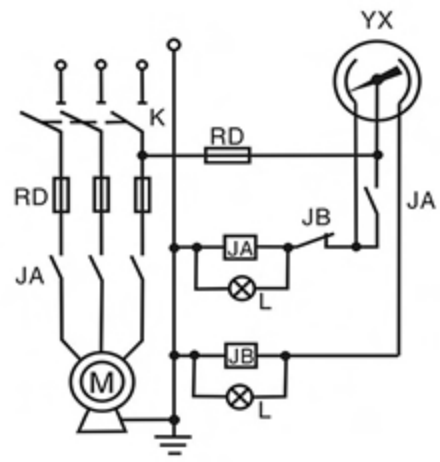

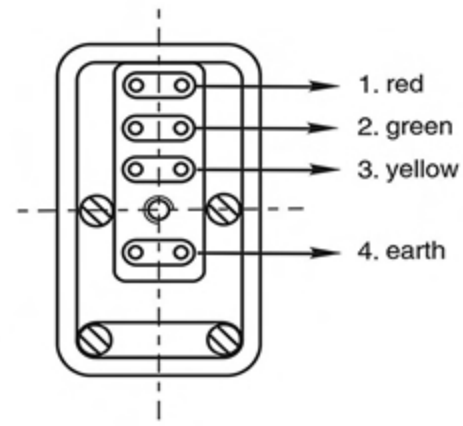

Specifications

Diameter	Range	Accuracy		Connection size
		Indication	set	
100 mm.	-1~0 Bar and 0~24 Bar Horizantal Diaphragm	2.5	2.5	M20x1.5/NPT1/2
150 mm.	-1~0 and 0~600 Bar Diaphragm Seal	1.6	4	M20x1.5/NPT1/2

◆ Working pressure: Static load to the upper limits 3/4,Alternating load to the upper limits 2/3,Short time pressure to the upper limits.

◆ Temperature impact: Temperature deviation from 20 ± 5℃ the error of set point is less than 0.6%/10℃

◆ Ambient temperature: –40 ~ 70℃ (The reletive Humidity is less than 85%)

Dimensions (mm.)

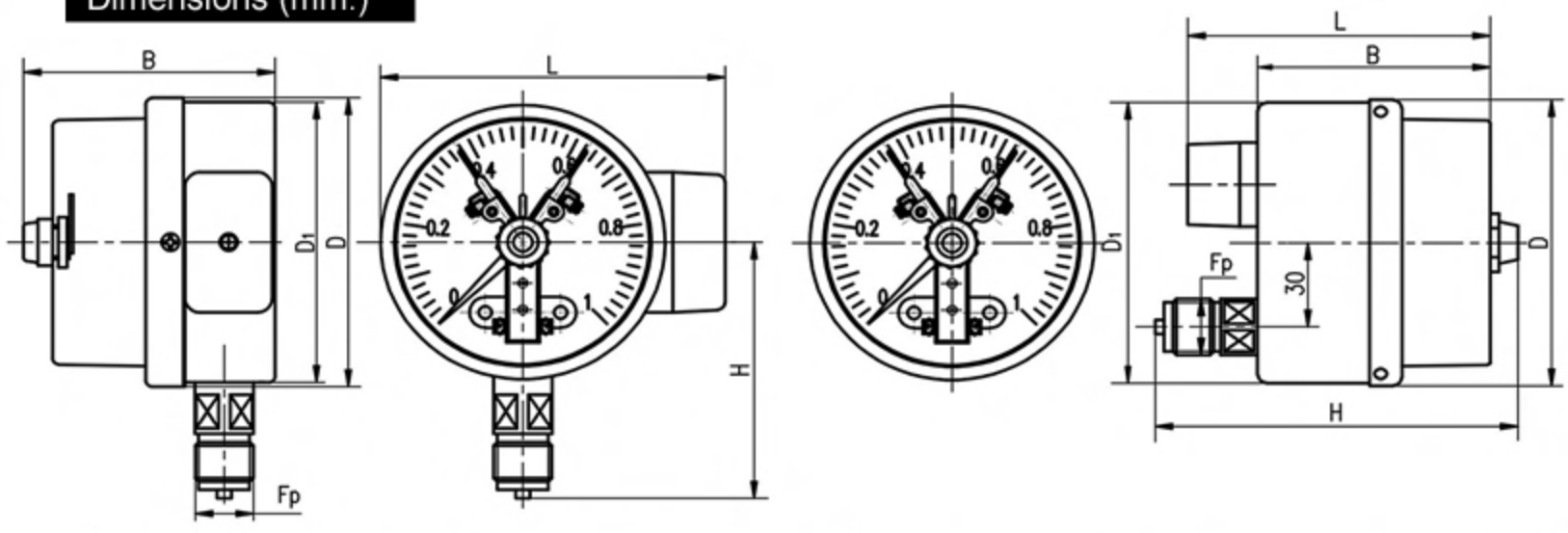

Diameter	D	D1	B	H	L	Fp
100 mm.	102	100	85	91/88	120	M20x1.5/NPT1/2
100 mm.back	102	100	89.5	124.5/121.5	104	M20x1.5/NPT1/2
150 mm.	150	148	86.5	128/125	170	M20x1.5/NPT1/2

Eryaman AVM. 2.Cad.No:11/50 06793 Ankara-TURKEY • Tel: +90 312 279 44 51 • Fax: +90 312 279 55 58 • e-mail: info@teknopoli.com • web: http://www.teknopoli.com

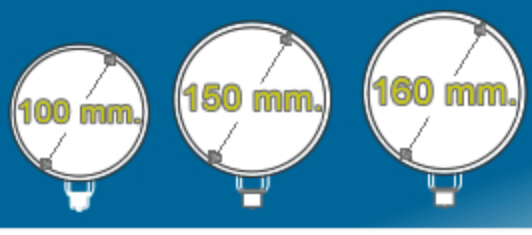

Solid Contact Pressure Gauge

SK-MN

- (Solid model) Stainless steel electric contact pressure gauge

Corrosion–proof

SK-MN-P-100

- (Solid model) Stainless steel vibration–proof electric contact pressure gauge (oil filling)

Corrosion–proof & vibration–proof

SK-MN-P-100-GL

Application

- SK-MN-P-100 The materials of element for measuring pressure and case are both stainless steel, Suitable for measuring the strong corrosion gaseous and liquid medium pressure.
- SK-MN-P-100 Liquid filled gauges are filled with oil for vibration –proof indication,suitable for the adverse service conditions where sharp pulsation and vibration exist.

Wiring Scheme

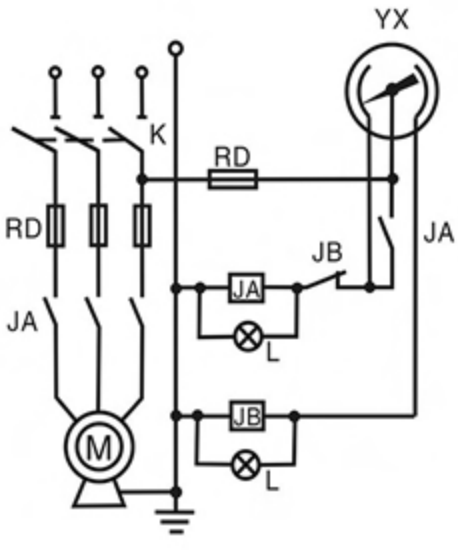

YX Electric contact pressure gauge

M Power generator

JA Contactor and its contacts

JB Medium relay and its contacts

K Combination switch

L Indication camp

RD Fuse

1–3 upper limits

2–3 lower limits

⏚ earth

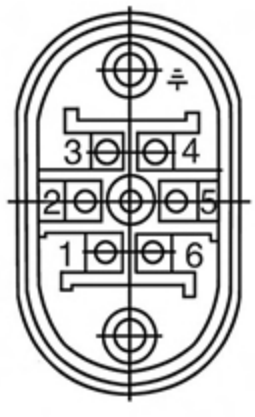

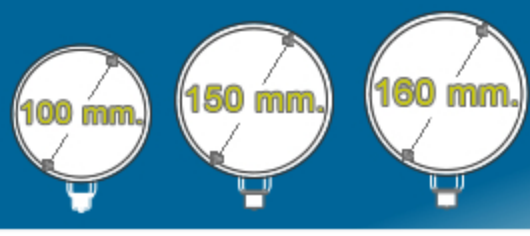

Solid Contact Pressure Gauge

SK-MN

Mounting	Stainless steel corrossion–proof electric contact pressure gauge	Stainless steel vibration–proof with oil filling electric contact pressure gauge
Bottom mounting direct Φ 100mm Φ 150mm Φ 160mm 	SK-MN-P-100-Bottom SK-MN-P-150-Bottom SK-MN-P-160-Bottom	SK-MN-P-100-..-Bottom SK-MN-P-150-..-Bottom SK-MN-P-160-..-Bottom
Back mounting direct Φ 100mm Φ150mm 	SK-MN-P-100-Back SK-MN-P-150-Back	SK-MN-P-100-..-Back SK-MN-P-150-..-Back
Bottom embedded mounting Φ100mm Φ150mm 	SK-MN-P-100-RF-Bottom SK-MN-P-150-RF-Bottom	SK-MN-P-100-..-FF-Bottom SK-MN-P-150-..-FF-Bottom
Back mounting with front flange 100mm 150mm 	SK-MN-P-100-FF-Back SK-MN-P-150-FF-Back	SK-MN-P-100-..-FF-Back SK-MN-P-150-..-FF-Back

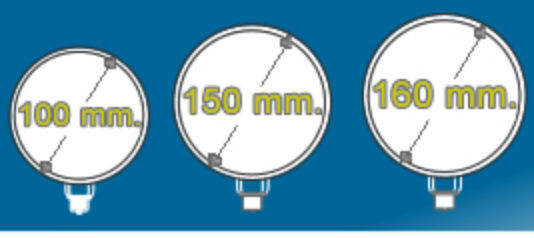

Solid Contact Pressure Gauge

SK-MN

Specifications

Ranges	Minimum: 0 ~ 1 Bar Maximum: 0 ~ 1000 Bar Minimum negative pressure:-1 Bar
Accuracy Class(Indication)	Φ100mm≤1 Bar 2.5% Φ100/150/160mm,1.6% (1.0%)
Accuracy Class(Setting)	4%
Quantity of Contacts	1 or 2
Max Working Voltage	AC380V (or) DC220V
Max Current	1A
Contact Power	30VA
Temperature Effects	0.6%/10℃ When temperature deviates from 20±5℃, the error of set point is not more than 0.6%/10℃
Ingress Protection	Standart IP54, Liquid filling IP65
Window	Common glass or Safety glass
Connection Size	R 1/2", 1/2" NPT, M20x1.5
Liquid Filling	Special liquid filled

RANGES		
-1~0 Bar	0.6 Bar	25 Bar
-1~0.6 Bar	1 Bar	40 Bar
-1~1.5 Bar	1.6 Bar	60 Bar
-1~3 Bar	2.5 Bar	100 Bar
-1~5 Bar	4 Bar	160 Bar
-1~9 Bar	6 Bar	250 Bar
-1~15 Bar	10 Bar	400 Bar
-1~24 Bar	16 Bar	600 Bar
40 mBar	150 mBar	400 mBar
60 mBar	160 mBar	600 mBar
100 mBar	250 mBar	1 Bar

Fitting Diaphragm Seals

Composing with our diaphragm seals in different materials,the above pressure gauges can also made into the electric contact diaphragm pressure gauges that are applied in measuring viscous,strongly corrosive medium as well as the orystallographic medium.
Please see Diaphragm Seal Pressure Gauge for more flange diaphragm seals.

How to Order

Please specify the following properties when the manometer ordering.

- Contact principle,
- Model number,
- Dial size,
- Range and pressure unit
- Panel mounting; Front Flange (FF), Rear Flange (RF)
- Connection type,
- Connection thread,
- Accuracy,
- If necessary; Special scale,Diaphragm seals,..
- Contact type

For example: *SK-MN-P-160-(0/100 Bar)-RF-Bottom-R1/2-1.6.821.12*

Eryaman AVM. 2.Cad.No:11/50 06793 Ankara-TURKEY • Tel: +90 312 279 44 51 • Fax: +90 312 279 55 58 • e-mail: info@teknopoli.com • web: http://www.teknopoli.com

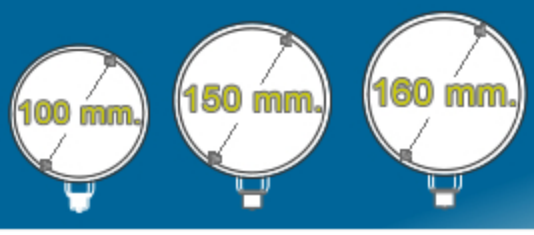

Solid Contact Pressure Gauge

SK-MN

Dimensions (mm.)

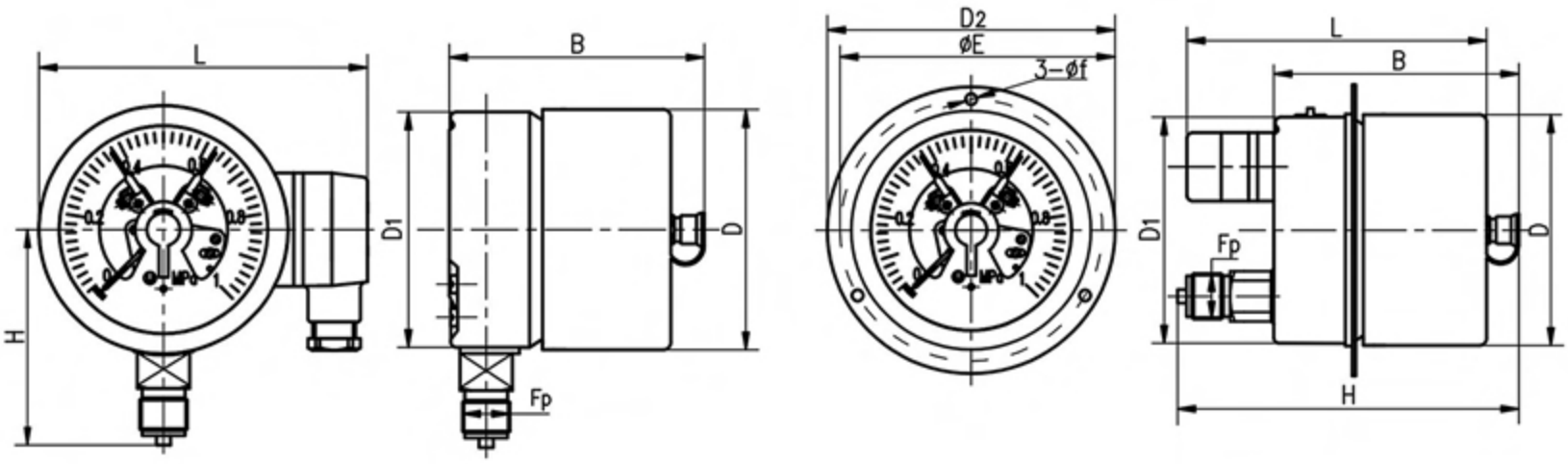

Diameter	D	D1	B	H	L	Fp
100 mm.	101	99	102	88/85	142	M20x1.5/NPT1/2
150 mm.	149	146	102	115/112	192	M20x1.5/NPT1/2
160 mm.	161	159	104	118/115	202	M20x1.5/NPT1/2

Diameter	D	D1	B	H	L	Fp
100 mm. Back	101	99	104	143/140	132	M20x1.5/NPT1/2
150 mm. Back	149	146	104	143/140	132	M20x1.5/NPT1/2

Diameter	D2	ϕ E	ϕ f
100 mm. Back+Panel	128	118.5	5
150 mm. Back+Panel	180	165	6

Eryaman AVM. 2.Cad.No:11/50 06793 Ankara-TURKEY • Tel: +90 312 279 44 51 • Fax: +90 312 279 55 58 • e-mail: info@teknopoli.com • web: http://www.teknopoli.com

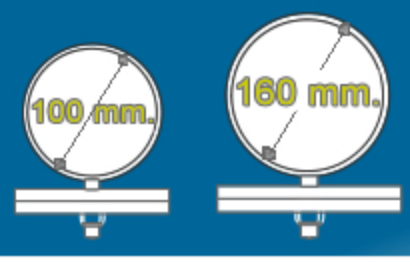

Solid Contact Pressure Gauge

SK-YMN

Product overview

TEPO SK-YMN Diaphragm electric contacts pressure gauge adopts diaphragm as sensitive element, and it could choose different materials baed on different measure mediums. The pressure gauge mainly applys to measure the micropressure of gas, liquid in industry course, especially fits to medium of corrosion and viscidity (non–solidification & non–crystal). The pointer of instrument will make contacts turn on or cut with the contacts of set fing er, causing the cut and turn–on of control system for the purpose of automatic control and alarm.

Specifications

- Type:Standard type
- Diameter: Φ100mm, Φ160mm
- Accuracy: Φ100mm, ±1.6%; ±2.5% Φ160mm, ±1.6%
- Set accuracy: ±4%
- Contact points: 1 or 2
- Contacts control: See attached table
- Range: Plus pressure 0–100 mBar to 0~2.5 Bar
  Minus pressure –100 ~ 0 mBar and other compound ranges
- Working pressure: Steady: 3/4 of full scale value; fluctuating: 2/3 of full scale value Short time: full scale value
- Diaphragm material: AISI316, AISI316L, PTFE coated
- Connection body: AISI304, AISI316 (AISI316L)
- Case material: AISI304
- Windows: Organic glass, Safety glass (double deck)
- Case protection: Class standard type: Ip54
- Maximum working voltage: 380V.AC or 220 V.AC
- Maximum current: 1A
- Contact power: 30VA
- Environment temperature: Standard type: –40 ~ +70℃
- Connection: R 1/2", 1/2" NPT, M20x1.5 or special requirement Flanged connection

Dimensions (mm.)

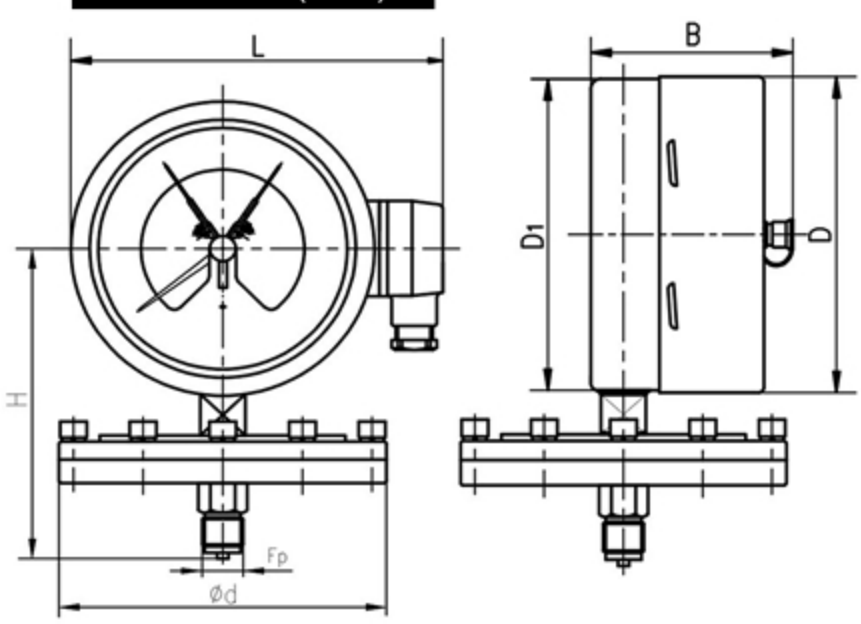

Ranges (Bar)	Gauge Dimensions mm						
	ϕd	ϕD	ϕD1	B	H	L	Fp
≤0.25	160	101	99	102	135/132	142	M20x1.5/NPT1/2
		161	159	104	165/162	202	M20x1.5/NPT1/2
>0.4	100	101	99	102	135/132	142	M20x1.5/NPT1/2
		161	159	104	165/162	202	M20x1.5/NPT1/2

Eryaman AVM. 2.Cad.No:11/50 06793 Ankara-TURKEY • Tel: +90 312 279 44 51 • Fax: +90 312 279 55 58 • e-mail: info@teknopoli.com • web: http://www.teknopoli.com

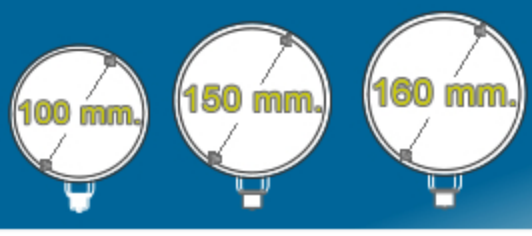

Solid Contact Pressure Gauge

SK-YMN

Switch control method of electric contacs

Code of contacts	Code title	Quantity	Switch fuction of deasil rotating pointer	Sketchmap
One upper limits	821.1	1	Over the setpoint,circuit is turned on (N.O.)	
One lower limits	821.2		Over the set point,circuit is cut off (N.C.)	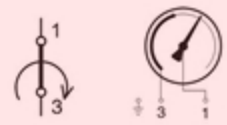
Two upper limits	821.11	2	Over the setpoint,circuit is turned by contact 1and 2	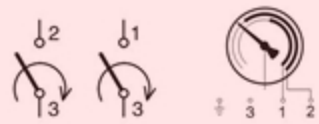
Two lower limits	821.22		Over the setpoint,circuit is cut by contact 1and 2	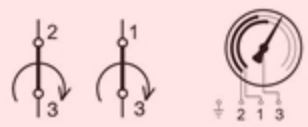
N.O.upper and lower limits	821.21		Over the setpoint,circuit is cut by contact 2,turned on by contact 1	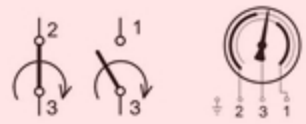
N.C.upper and lower limits	821.12		Over the setpoint,circuit is cut by contact 1,turned on by contact 2	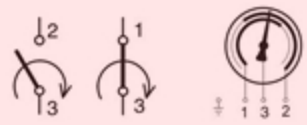

Notes

1. When ordering, please specify the name or No. of contacts referring to the table.
2. Leads of single or double contacts: lower limits is contact 2, upper limits setpoint is contact 1, contact 3 is public port.
3. Turn on and cut function details: The table shows the turn on and cut situations as pointer moves deasil, and the function is opposite while the pointer moves widdershins

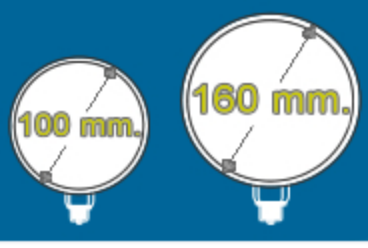

Ex-Proof Inductive Contact Pressure Gauges

EK-MN

Diameter ϕ100 ϕ160

Bourdon tube, Standard type
Bourdon tube, Obturation type
Bourdon tube, Vibration–proof type

Diameter ϕ100 ϕ160

Diaphragm standard type
Diaphragm Obturation type

Brief introduction

The switch of EK-MN series explosion–proof inductive pressure gauge is inductive approach form, because of non–contact–type, it have not any spoilage to the power supply system. Without electric spark, long using life, little impact on the measurement accuracy, it is not only applicable to certain dangerous places, but also suitable for frequent turn on/off occasions. It has the testing function, automatic control, automatic warning to the liquid medium .

EK-MN series explosion–proof inductive pressure gauge is based on IEC60079-0 < the request of the electric equipment used in explosive gas environment > " IEC60079-11 < safe explosive gas environment electrical equipment intrinsically safety–type" I " >, and qualified the relevant departments for the national explosion test.

EK-MN series explosion–proof inductive pressure gauge should match with safety bar P+F to be a system of intrinsically safe explosion–proof. This system is applied to 1 area and 2 area with explosive gas.

Operation principles

The measure system of EK-MN series explosion–proof inductive contacts pressure gauge.Is composed by the bourdon tube, mechanical transmission system, value–show components,inductive contact device.

The deformation of bourdon tube under the measuring pressure causes pipes –displacement, and the which is transferd displacement is enlarged by mechanical transmission organizations (connecting rod and movement),to value–show components. Then the value of the pressure is indicated and the position of control patched. When the up and down limits set become to be coinciding, the control patch affects the electromagnetic field changes to transform the state of electrical switches.

With the output of turn on/off signal, to send the alarm or start/stop machine after connecting outer equipment, control system pressure within required range.

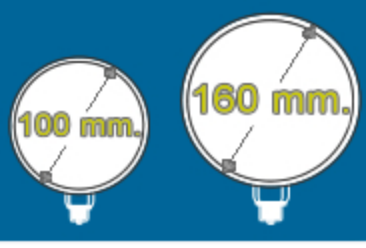

Ex-Proof Inductive Contact Pressure Gauges

EK-MN

Specifications

Types	Bourdon tube standard type Bourdon tube obturation type Bourdon tube vibration–proof type Diaphragm standard type Diaphragm obturation type
Diameter	ϕ100mm、ϕ160mm
Structure	①≥1 Bar Bourdon tube type ②<1 Bar Diaphragm type
Accuracy	ϕ 100mm Bourdon tube type: (≥ 4 Bar): 1.0%, 1.6% (< 4 Bar & vacuum): 1.6% ϕ 160mm Bourdon tube type: (≥ 1 Bar): 1.0%, 1.6% (vacuum):1.6% ϕ 100mm Diaphragm type: 2.5%;≥ 100 mBar 1.6% ϕ 160mm Diaphragm type: 1.6%; < 100 mBar 2.5%
Range	① 0–1 to 0–600 Bar , –1–0 and compound ranges Bourdon series ②40 mBar–1Bar, –1Bar –0 and compound ranges Diaphragm series
Electrical Parameter	① Pressure gauge fixed: 8VDC, Safe voltage <16VDC ② Working current: Opening ≥ 3mA,Closed ≤ 1mA,Safe current < 52mA ③ On/off frequency <5000Hz
Ambient temperature	–20℃ ~ +60℃
Ex-proof class	Exib II CT6
Protection class	① Standard type:IP54 ② Obturation & vibration–proof type:IP65
Liquid filling	Special Instrument liquid.

Ranges	
40 mBar	160 Bar
60 mBar	200 Bar
100 mBar	250 Bar
160 mBar	300 Bar
200 mBar	350 Bar
250 mBar	400 Bar
400 mBar	600 Bar
600 mBar	-40 mBar
1 Bar	-60 mBar
1.6 Bar	-100 mBar
2.5 Bar	-160 mBar
4 Bar	-200 mBar
6 Bar	-250 mBar
10 Bar	-400 mBar
16 Bar	-600 mBar
20 Bar	-1 Bar
25 Bar	
40 Bar	
50 Bar	
60 Bar	
100 Bar	

How to Order

Please specify the following properties when the manometer ordering.

- Contact principle,
- Model number,
- Dial size,
- Range and pressure unit,
- Panel mounting; Front Flange (FF), Rear Flange (RF)
- Connection type,
- Connection thread,
- Accuracy,
- If necessary; Special scale,Diaphragm seals,..
- Contact type

For example: *EK-MN-P-100-(0/40 Bar)-RF-Bottom-R1/2-1.6-831.12*

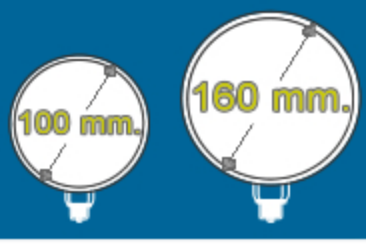

Ex-Proof Inductive Contact Pressure Gauges

EK-MN

Dimensions (mm.)

Bourdon tube type

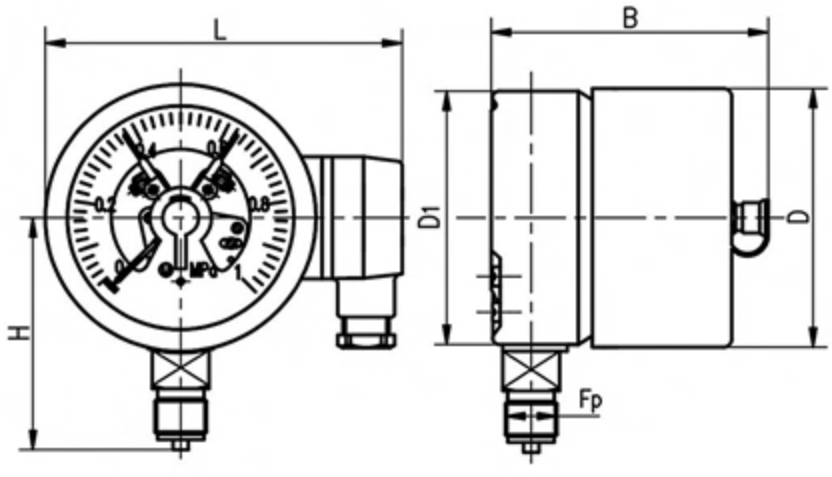

Diaphragm type

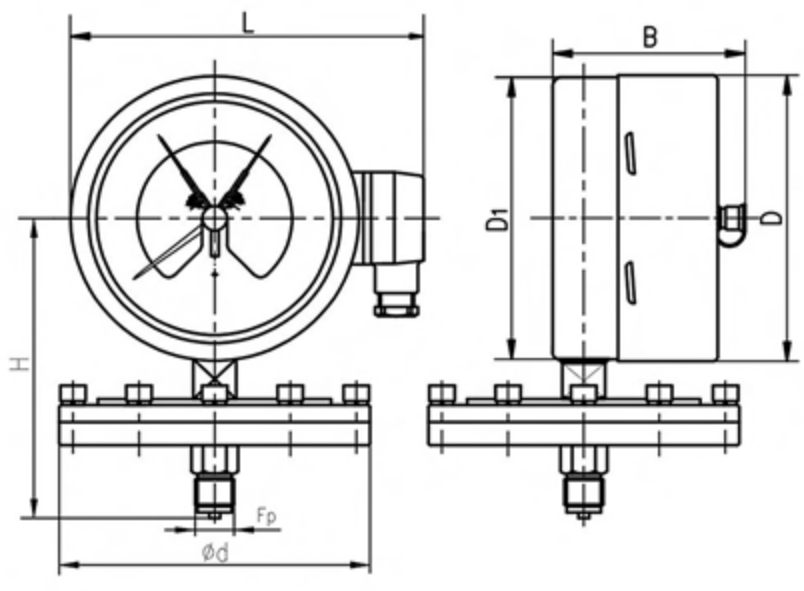

Bourdon tube type

Diameter	D	D1	B	H	L	Fp
100 mm.	101	99	102	88/85	142	M20x1.5/NPT1/2
160 mm.	161	159	104	118/115	202	M20x1.5/NPT1/2

Diaphragm type

Ranges (mBar)	Gauge Dimensions mm						
	ϕ d	ϕ D	ϕ D1	B	H	L	Fp
≤ 250	160	101	99	102	135/132	142	M20x1.5/NPT1/2
		161	159	104	165/162	202	M20x1.5/NPT1/2
>400	100	101	99	102	135/132	142	M20x1.5/NPT1/2
		161	159	104	165/162	202	M20x1.5/NPT1/2

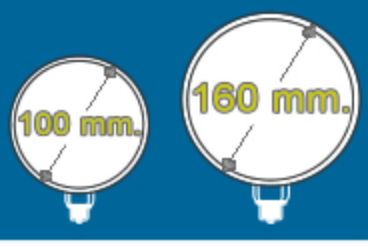

Ex-Proof Inductive Contact Pressure Gauges

EK-MN

Switch control method and wiring diagram of electric inductive approach switch

Code of contacts	Model code	Contact ea.	Contact function (principle)	Wiring scheme
1 2 - + 1 x min	831.2	1	Contact breaks by rising pressure (NC normally closed)	1 2
1 2 - + 1 x max	831.1		Contact makes by rising pressure(NO normally open)	1 2
1 3 4 2 - - + + 2 x min	831.22	2	Contact breaks by rising pressure (NC normally closed)	1 2 3 4
1 3 4 2 - - + + 2 x max	831.11		Contact makes by rising pressure (NO normally open)	1 2 3 4
1 3 4 2 - - + + min - max	831.12		Contact breaks by falling and rising (1NO-1 NC)	1 2 3 4
1 3 4 2 - - + + max - min	831.21		Contact makes by falling and rising (1NC-1 NO)	1 2 3 4

Notice:

1. When ordering, please specify the name or No. of contacts referring to the table.
2. Turn on and cut function details: The table shows the turn on and cut situations as pointer moves deasil, and the function is opposite while the pointer moves widdershins.

Safe bar option

Function	Code	Quantity	Safe bar code (power supply voltage 24V)	Safe bar code (power supply voltage 220V)
One up limit	2	1	KFD2–SR2–Ex1.W	KFA6–SR2–Ex 1.W
One down limit	1			
Two up limit	22	2	KFD2–SR2–Ex2.W	KFA6–SR2–Ex 2.W
Two down limit	11			
N.O. up & down limit	12			
N.C. up & down limit	21			

Safe bar option Specifications

Type	KFD2–SR2–Ex1.W, KFD2–SR2–Ex2.W	KFA6–SR2–Ex1.W, KFA6–SR2–Ex2.W
Specification	1. Power supply：24VDC 2. No–coad voltage：8VDC 3. Max current ：8mA 4. Intrinsic safety circuit:Ex(ia) II C U_o ≤10.5VDC I_o ≤13mA P_o≤ 34mW C_o=2.41 μ F L_o=210mH	1. Power supply：220VAC 2. No–coad voltage：8VDC 3. Max current ：8mA 4. Intrinsic safety circuit:Ex(ia) II C U_o ≤10.5VDC I_o ≤19mA P_o≤ 51mW C_o=2.9 μ F L_o=100mH

Eryaman AVM. 2.Cad.No:11/50 06793 Ankara-TURKEY • Tel: +90 312 279 44 51 • Fax: +90 312 279 55 58 • e-mail: info@teknopoli.com • web: http://www.teknopoli.com

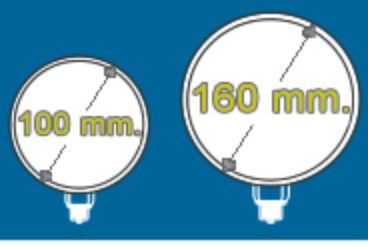

Ex-Proof Inductive Contact Pressure Gauges

EK-MN

Power supply 220 VAC

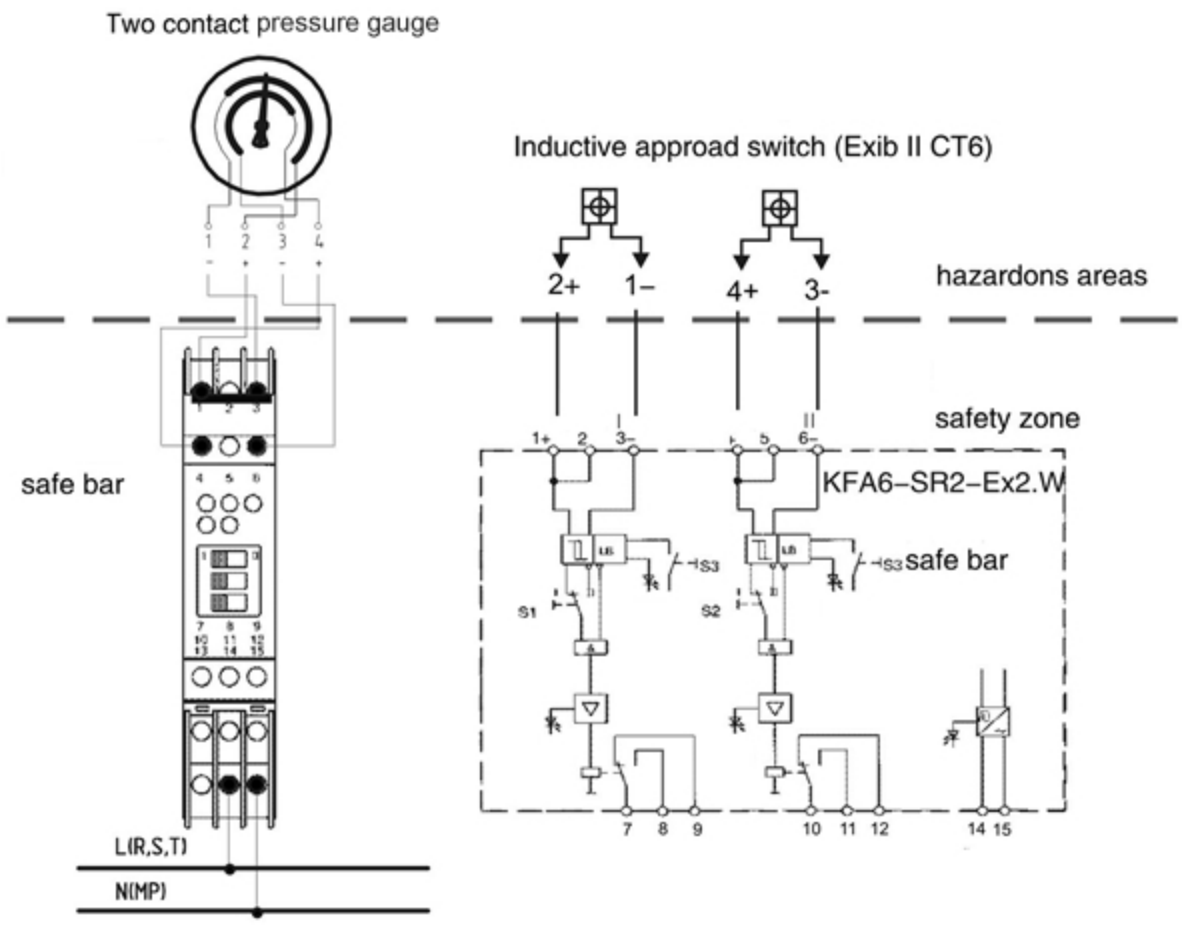

- Drive with two contacts thermometer
- Output of relay with two single–pole double–throw contacts.
- Input signal I: 1 connect +, 3 connect –
- Input signal II: 4 connect +, 6 connect –
- Power supply (220V):14,15
- Output signal I : 7, 8, 9 relay
- Output signal II : 10, 11, 12 relay
- LED:
  Circuit state (green)
  Broken circuit state (red)
  Relay outputstate (yellow)

Power supply 24 V

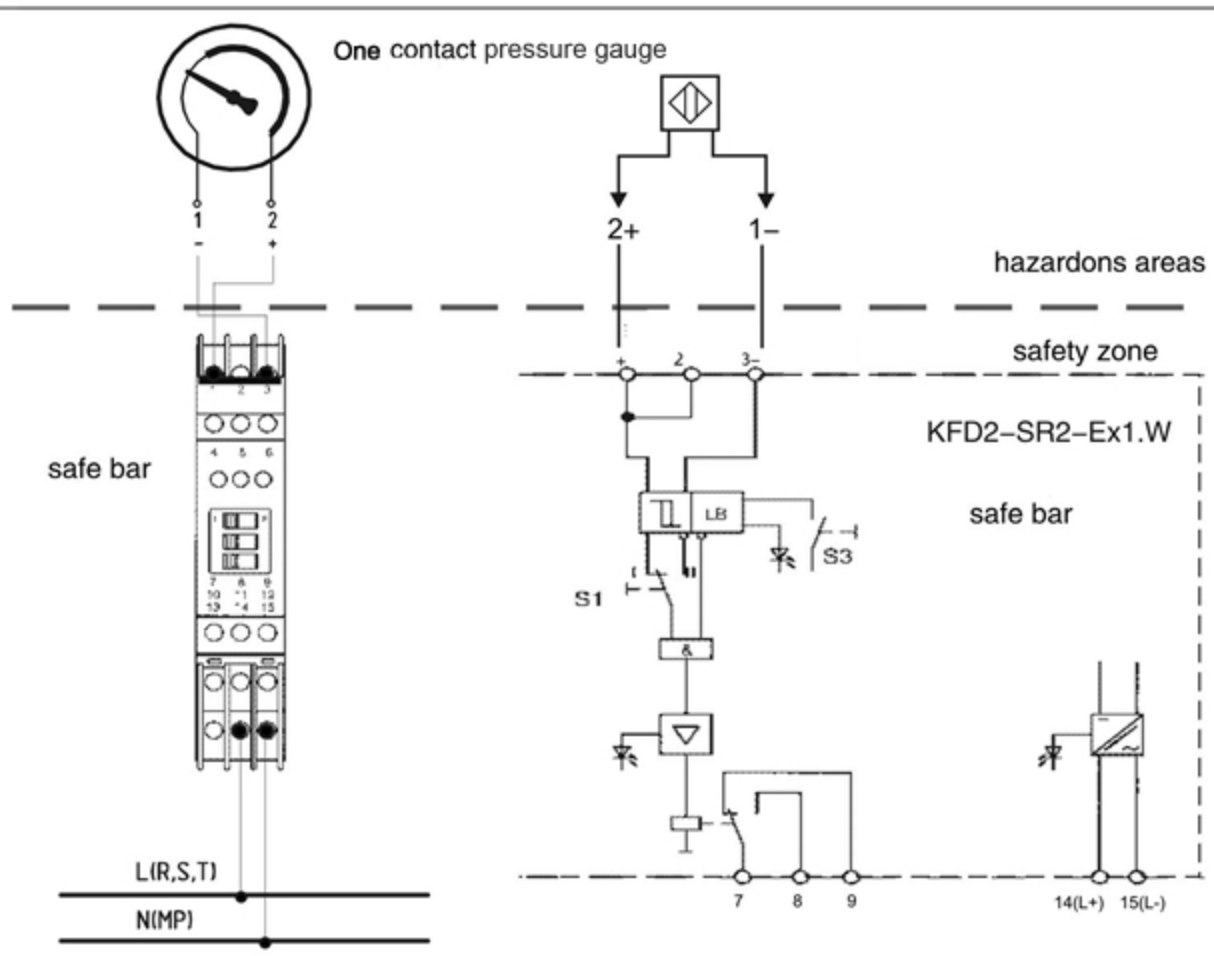

- Input signal: 1 connect +,
  3 connect –
  (220V): 14, 15
- Power supply: 14, 15
- Output signal: 7. 8, 9 relay
- Drive one contact thermometer
- Output of relay with one single–pole double–throw contact.
- LED:
  Circuit state (green)
  Broken circuit state (red)
  Relay outputstate (yellow)

Eryaman AVM. 2.Cad.No:11/50 06793 Ankara-TURKEY • Tel: +90 312 279 44 51 • Fax: +90 312 279 55 58 • e-mail: info@teknopoli.com • web: http://www.teknopoli.com

Summary

Model	Name and feature
DF standard style	Normal threaded connection type
DF1	I–Shape Flange
DF2	Open Flange
DF4	Angle adjustable diaphragm Seals
DF5	Extended type diaphragm Seals
DF6, DF7	Sanitary diaphragm seals
DF8	Welded one–piece type diaphragm Seals
DF10	In Line Diaphragm Seals

Diaphragm Seals

DF

Product Overview

Series diaphragm pressure gauge (chemical seals) is composed of a conventional pressure measuring instrument, a connector and a diaphragm seal.

This combination enables a general purpose pressure gauge to measure media of strong corrosion, high temperature, high viscosity, containing suspended matter or crystallizing. Diaphragm gauges are universally used in petrochemical, alkali, chemical fiber, pharmaceutical, metallurgical, and food industries.

Configuration Principle

This illustration shows the operating principle of the diaphragm pressure gauge. The diaphragm is deflected by the pressure of medium P, and an equivalent pressure P' is generated. With transmitting through working fluid, the pressure P' deflect the elastic element of a pressure measuring instrument which thereafter shows the pressure value.

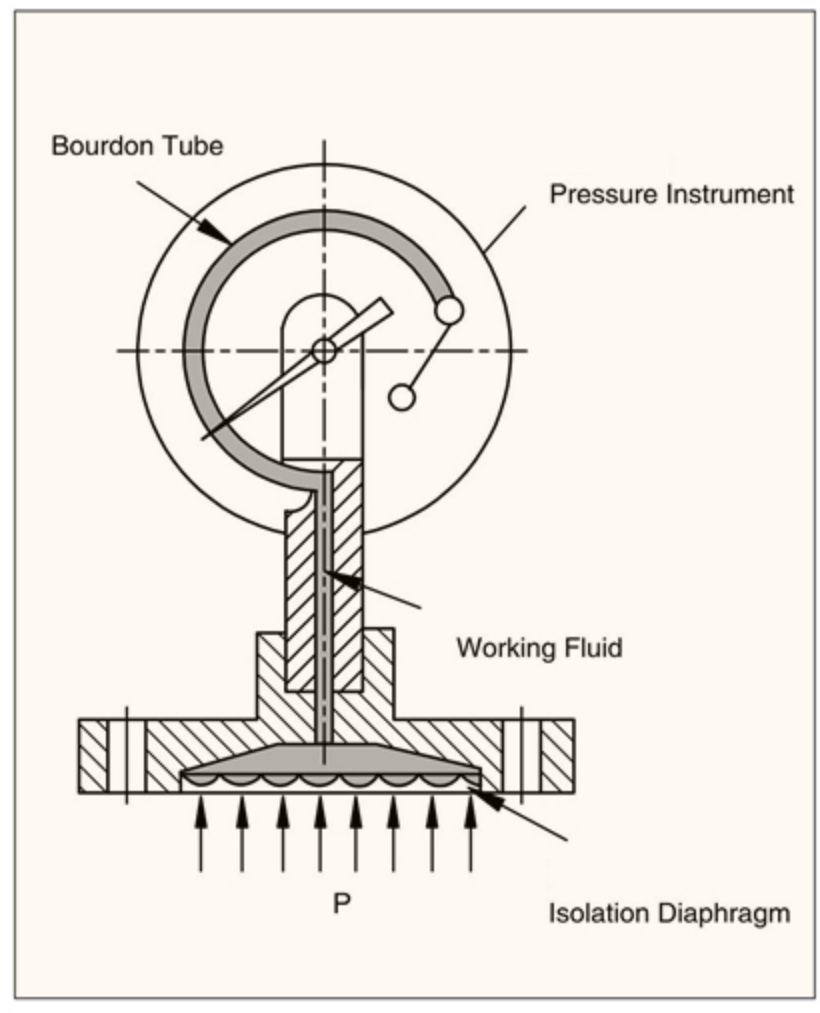

Level difference of Diaphragm pressure gauge seals liquid

When a diaphragm pressure gauge is mounted with pressure gauge and diaphragm seal at different positions, the effect of level difference should be taken into consideration (especially for a diaphragm gauge with capillary).

As the illustration shows, with a S.G. of the working fluid at approx.1, and a level difference of 1m, the pressure difference is approx.0.1 Bar

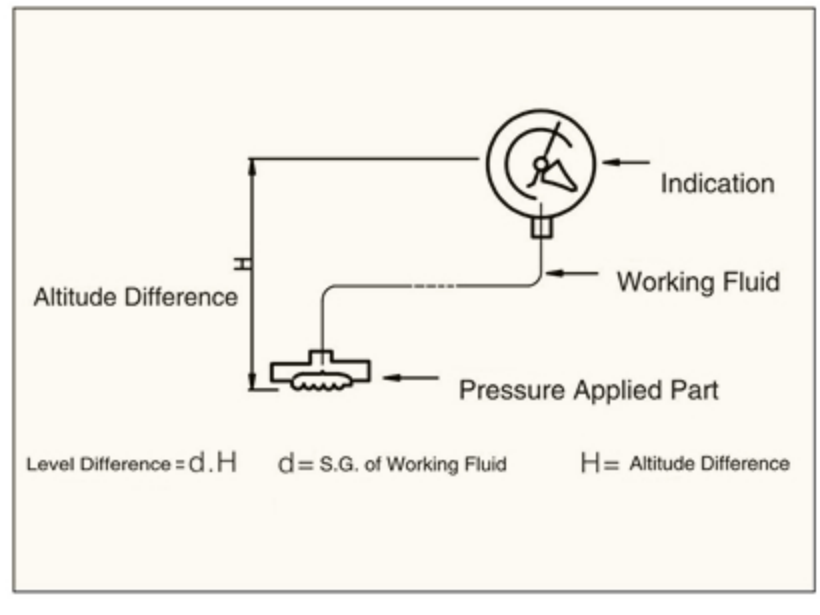

Temperature Influence of diaphragm pressure

The temperature influence of a diaphragm pressure gauge is relative to expansion coefficient of the seals working fluid, rigidity of the diaphragm, and temperature of pressed part. When working temperature deviates from 20±5℃,the indication varies within 0.1%/℃ for rigid system, and within 0.1+0.025L%/℃ (L–length of capillary in m.) for flexible sys tem (remote mounting). Diaphragm pressure gauges are filled with suitable working fluid according to different operating conditions.

Option for Working Fluid				
Name of Working Fluid	Temperature range for Diaphragm equipment	g/cm² Specific Gravity	1/℃ Factor of Expansion	Purpose
Glycerin–Water Solution	–5–100℃	1.27	0.61×10^{-3}	Food
Silicon (low viscidity)	–40–130℃	0.94	1.08×10^{-3}	General
Silicon (high viscidity)	–30–240℃	1.07	0.95×10^{-3}	High Temperature
Fluorocarbon Oil	–30–160℃	1.93	0.75×10^{-3}	Hydrogen, Oxygen, Salts, Acid
Vegetable Oil	–5–100℃	0.93	1.03×10^{-3}	Food

or other special working fluid

Corrosion-Proof properties of diaphragm pressure gauge

Teknopoli Diaphragm Pressure Gauge satisfies customers' requirements of both environmental conditions and flow conditions (corrosive media) based on its significant corrosion–proof properties. Choose various pressure gauges combined with appropriate separator according to environmental conditions. Choose material of diaphragm and housing compatible with corrosive media.

①.Diaphragm Material: AISI 316, AISI316L, Monel (Cu30Ni70), Hastelloy(HC276), Tantalum (Ta), Fluoroplastic (F4)
②.Body Material: 1Cr18Ni9Ti, AISI 316, AISI 316L, Fluoroplastic (F4), Fluoroplastic Coated Stainless Steel
③.Gasket Mateial: Nitrile Rubber, Viton, Silicone Rubber, Fluoroplastic

Material selection for diaphragm

Corrosive media	AISI 316L	Tantalum (Ta)	Monel (Ni70Cu30)	Hastelloy (HC)	Ti	Polytetraf Cuoroethylene
Vitriol(H_2so_4)	△	○	V	V	X	V
Nitric acid(HNO_3)	V	○	X	V	V	V
Muriatic acid (HCl)	X	○	X	V	△	V
Phosphoric acid (H_3PO_4)	V	○	V	V	X	V
Acetate (CH_3COOH)	V	○	V	○	○	V
(NaOH)	○	△	○	○	V	V
Pure alkali (Na_2CO_3)	○	○	○	V	V	V
Saleratus ($NaHCO_3$)	○	○	○	○	○	V
Chlorine (Cl)	Dry V Wet x	○	Dry V Wet x	V	Dry x Wet ○	V
Bromine (Br_2)	Dry x Wet △	○	Dry ○ Wet x	○	Dry x Wet x	V
Ammonia (NH_3)	V	x	x	○	○	V
Sea water (30% NaCl)	V	○	○	○	○	V

Remark: ○— best; △— conditional; V— use; x — no using

Note: Standard material is AISI 316L, corrosion–proof materials should be applied in normal temperature. Others please contact us.

Model =A+B+C

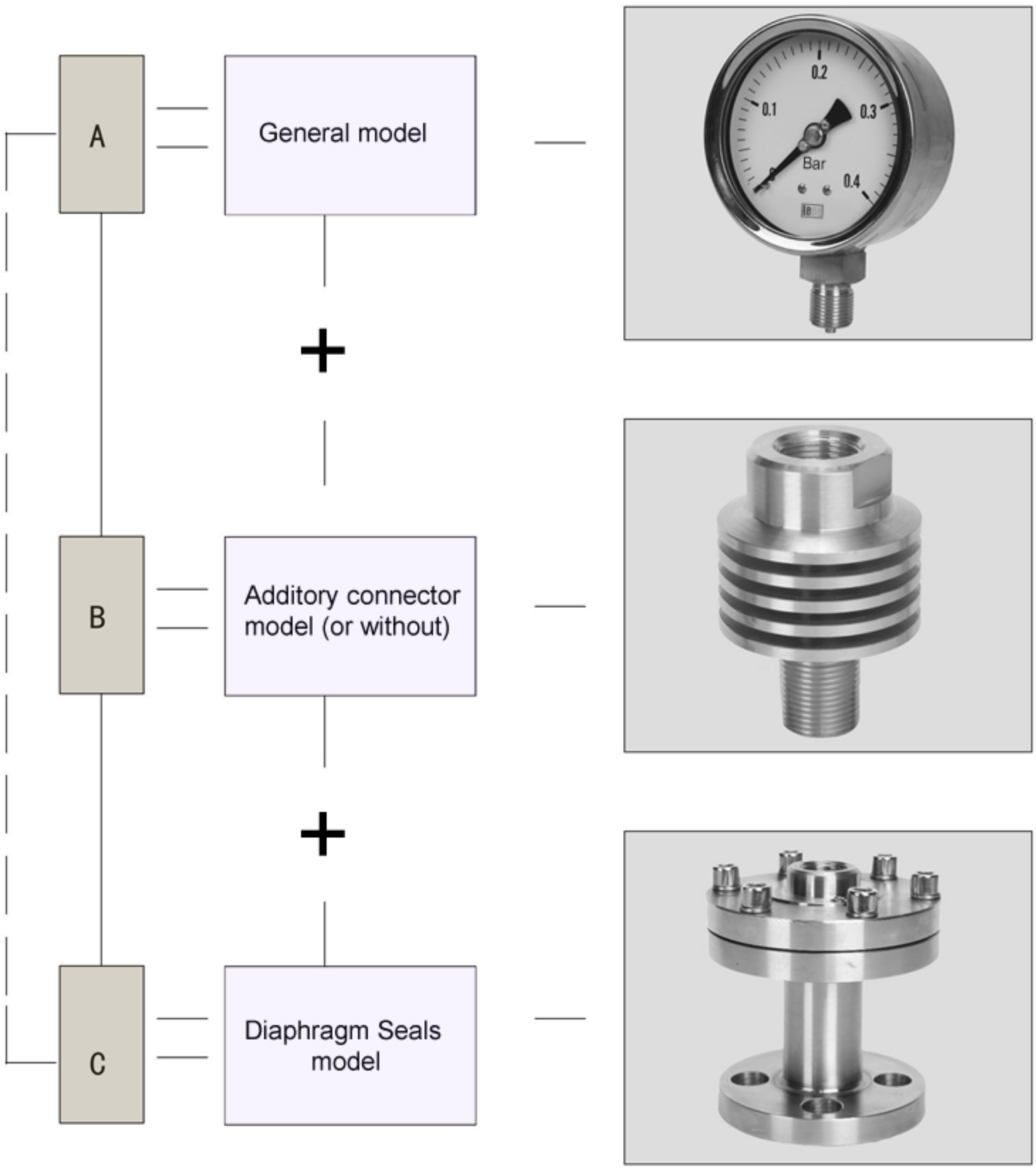

How to Order

Please specify the following properties when the manometer+accessories+diaphragm seals ordering.

- Manometer model number,
- Additory connector model (or without)
- Diaphragm seals model (or without)

For example: *MN-P-160-(0/100 Bar)-R1/2-1-DFNH*

AG1 Overpressure Protector

AY1 Capillary

AR1 Radiator

AZ1 Damper

AR2 Radiator

AC Special Angle

AR3 High–Temp Radiator

AR4 Siphon

Diaphragm Seals

DF

Types

DF Standard Type

DF1 I–Shape Flange

DF2 Welded diaphram

DF2 Clamped diaphram

DF4 Angle Adjustable

F4A

F4B

DFA Threaded

DFB Extended type

Types

DF5 Extended type

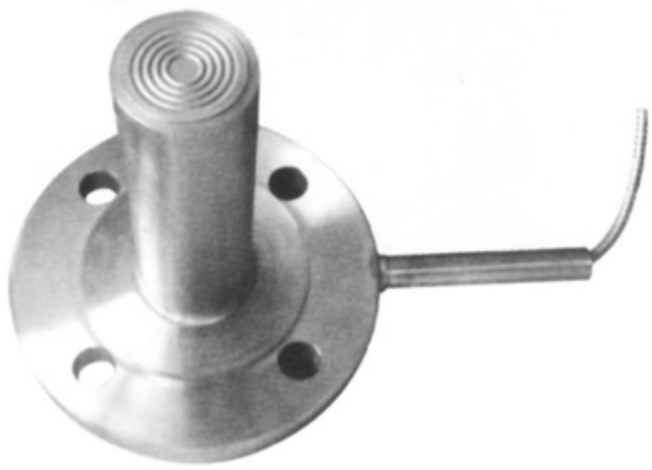

DF6 Clamp Connection

DF7 Threaded Connection (sanitary type)

DF8 Welded one–piece Type

DF10 In line Diaphragm Seals

DF200 Maximum pressure range: 5000psi

DF Diaphragm Seals With Threaded Connection

Special items

- High temperature: Max 240℃
- Diaphragm material: Hastelloy C,Tantalum,Titanium, Monel, 316L PTFE coate
- Wetted material: 304,316, 316L (or PTFE coated)
- Connection: other on request
- Filling liquid: As different media, optional fluorocarbon oil, –60··+120℃, Food oil, –20··+160℃

Specifications

- Range: DFNH **0-2,5/0-250 Bar**
  DFNM **0-40/0-250 Bar**
  DFNS **-1-0/0-60 Bar**
  DFNG **0-100/0-400 Bar**
- Accuracy: ±1.6%
- Working Temperature: –45··+150℃
- Diaphragm Material: 316L
- Wetted material: 316+BUNA
- Connection: Thread 1/2" NPT, R 1/2", M20x1.5
- Filling liquid: Silicone oil

Dimensions (mm.)

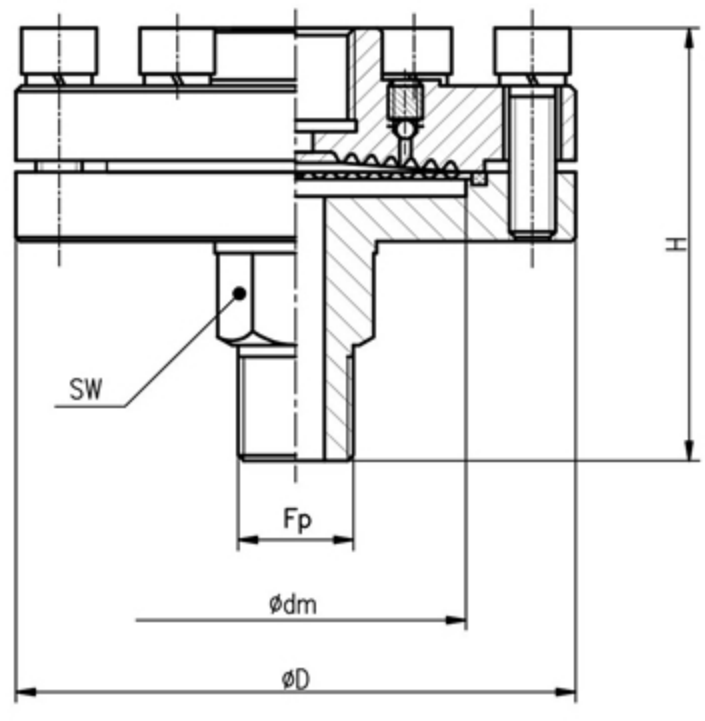

Type code	D	dm	Fp/Fm	H	SW
65 DFNH	61.5	42	M20X1.5/NPT1/2	66	24
77 DFNM	77	42	M20X1.5/NPT1/2	71	24
97 DFNS	97	61	M20X1.5/NPT1/2	72	24
97 DFNG	97	30	M20X1.5/NPT1/2	72	24

DF1 I-Shape Flange

Special items

- High temperature: Max 240℃
- Diaphragm material: Hastelloy C, Tantalum, Titanium, Monel, 316L PTFE coated
- Wetted material: 316, 316L (or PTFE)
- Connection: other on request
- Filling liquid: As different media, optional fluorocarbon oil, −60‥+120℃, Food oil, −20‥+160℃

Specifications

- Range: DFNS **-1-0/0-60 Bar**
  DFNG **0-100/0-400 Bar**
- Accuracy: ± 1.6%
- Working Temperature: −45‥+220℃
- Diaphragm Material: 316L
- Wetted material: 304
- Filling liquid: Silicone oil

Dimensions (mm.)

DF1 I-shape flange

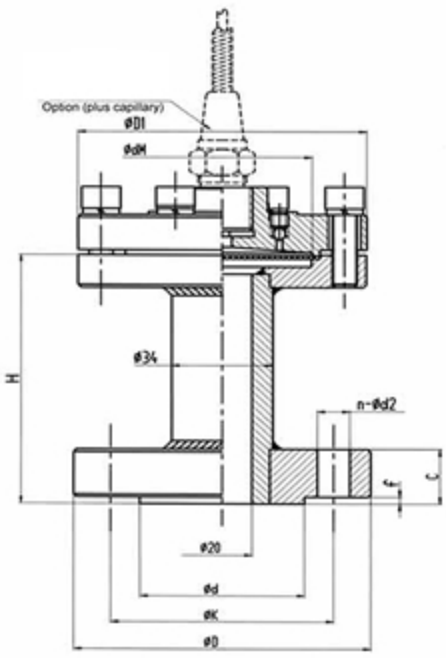

ϕ dM=56,
range: -1～0 / 0～40 Bar
ϕ dM=36,
range: 0～16 / 0～400 Bar

Flange [DIN]

(Flange)									(Diaphragm Seals)				
DN [mm]	PN [bar]	DIMENSION) [mm]							D1	dM	D1'	dM'	H
		D	C	d2	K	f	d	n					
15	10/40	95	14	14	65	2	46	4	97	56	61.5	49	82
20	10/40	105	16	14	75	2	56	4	97	56	61.5	49	82
25	10/40	115	16	14	85	2	65	4	97	56	61.5	49	82
40	10/40	150	18	18	110	2	84	4	97	56	61.5	49	82
	63/100	170	26	22	125	2	84	4	77	36	45	30	82
	160	170	36	22	125	2	84	4	77	36	45	30	82
	260	180	39	29	124	7	73	4	77	36	45	30	82
	420	205	52	32	146	7	73	4	77	36	45	30	82
50	10/40	165	20	18	125	2	99	4	97	56	61.5	49	82
	63	180	26	22	135	2	99	4	77	36	45	49	82
	100	195	28	26	145	2	99	4	77	36	45	30	82
	160	195	38	26	145	2	99	4	77	36	45	30	82
	260	215	46	26	165	7	92	8	77	36	45	30	82
	420	235	58	29	171.5	7	92	8	77	36	45	30	82
80	10/16	200	20	18	160	2	132	8	97	56	61.5	49	82
	25/40	200	24	18	160	2	132	8	97	56	61.5	49	82
	63	215	28	22	170	2	132	8	77	36	45	30	82
	100	230	32	26	180	2	132	8	77	36/30	45	30	82
100	10/16	220	22	18	180	2	156	8	97	56	61.5	49	82
	25/40	235	24	22	190	2	156	8	97	56	61.5	49	82
	63	250	30	26	200	2	156	8	77	36	45	30	82
	100	265	36	30	210	2	156	8	77	36/30	45	30	82

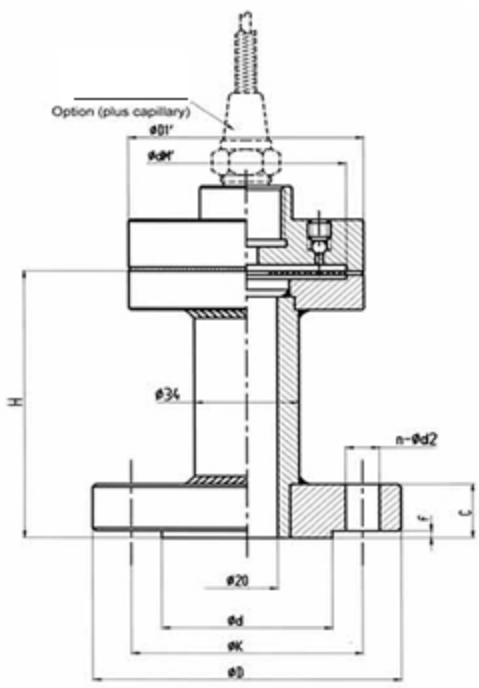

ϕ dM=49,
range: -1～0 / 0～40 Bar
ϕ dM=30,
range: 0～16 / 0～400 Bar

Flange [ANSI B16.5]

(Flange)									(Diaphragm Seals)				
DN [in]	PN [bar]	(DIMENSION) [mm]							D1	dM	D1'	dM'	H
		D	C	d2	K	f	d	n					
1/2	150	90	14	16	60.5	1.6	35	4	97	56	61.5	49	82
	300	95	16	16	66.5	1.6	35	4	97	56	61.5	49	82
3/4	150	100	16	16	70	1.6	43	4	97	56	61.5	49	82
	300	120	18	20	82.5	1.6	43	4	97	56	61.5	49	82
1	150	110	16	16	79.5	1.6	51	4	97	56	61.5	49	82
	300	125	18	20	89	1.6	51	4	97	56	61.5	49	82
	600	125	24	20	89	6.4	51	4	77	36	45	30	82
	900/1500	150	37	26	101.5	6.4	51	4	77	36	45	30	82
1 1/2	150	130	22	16	98.5	1.6	73	4	97	56	61.5	49	82
	300	155	22	22	114.5	1.6	73	4	97	56	61.5	49	82
	600	155	29.5	22	114.5	6.4	73	4	77	36	45	30	82
	900/1500	180	39	30	124	6.4	73	4	77	36	45	30	82
2	150	150	20	20	120.5	1.6	92	4	97	56	61.5	49	82
	300	165	22.5	20	127	1.6	92	8	97	56	61.5	49	82
	600	165	32	20	127	6.4	92	8	77	36	45	30	82
	900/1500	215	45	26	165	6.4	92	8	77	36	45	30	82
3	150	190	24	20	152.5	1.6	127	4	97	56	61.5	49	82
	300	210	29	22	168.5	1.6	127	8	97	56	61.5	49	82
	600	210	38.5	22	168.5	6.4	127	8	77	36	45	30	82
	900	240	45	26	190.5	6.4	127	8	77	36	45	30	82
	1500	270	54.5	33	203	6.4	127	8	77	36/30	45	30	82
4	150	230	24	20	190.5	1.6	158	8	97	56	61.5	49	82
	300	255	32	22	200	1.6	158	8	97	56	61.5	49	82
	600	275	45	26	200	6.4	158	8	77	36	45	30	82
	900	295	51	32	235	6.4	158	8	77	36	45	30	82
	1500	310	60.5	36	241.5	6.4	158	8	77	36/30	45	30	82

DF2 Open Flange

Special items

- High temperature: Max 240℃
- Diaphragm material: Hastelloy C, Tantalum,Titanium, Monel, 316L PTFE coated
- Flange material: 316, 316L
- Instrument connection: other on request
- Filling liquid: As different media, optional fluorocarbon oil, –60..+120℃, Food oil, –20... +160℃
- Capillary: max length 10m, material 304 covered With 304 armour, other on request

Specifications

- Range: -1-0/0-160 Bar
- Accuracy: ± 1.6%
- Working Temperature: –45..+150℃
- Diaphragm Material: 316L
- Flange material: 304
- Filling liquid: Silicone oil
- Flange standard: ANSI B 16.5
  DIN 2501

Dimensions (mm.)

DF2 flange

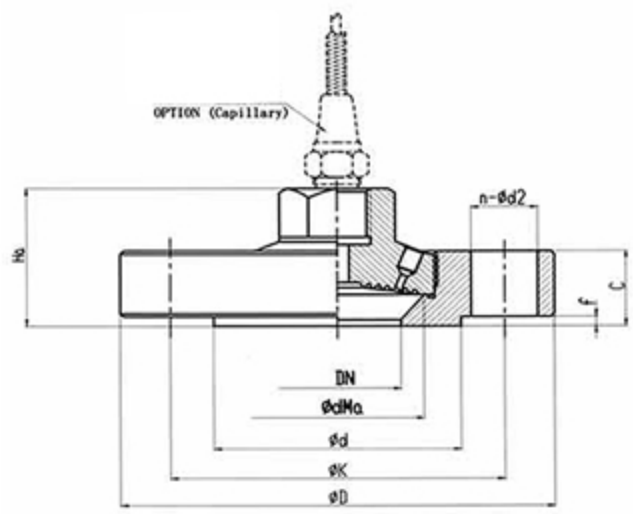

[DIN]

DN [in.]	PN [class]	(DIMENSION) [mm]							A		B	
		D	C	d2	K	f	d	n	dMa	Ha	dMb	Hb
15	10/40	95	14	14	65	2	46	4	-	-	30	40
20	10/40	105	16	14	75	2	56	4	-	-	30	40
25	10/40	115	16	14	85	2	65	4	49	40	49	40
40	10/40	150	18	18	110	2	84	4	49/75	40	49	40
	63/100	170	26	22	125	2	84	4	36	46	30	60
	160	170	36	22	125	2	84	4	36	56	30	75
	260	180	39	29	124	7	73	4	36	59	30	75
	420	205	52	32	146	7	73	4	36	72	30	85
50	10/40	165	20	18	125	2	99	4	49/75	40	49	40
	63	180	26	22	135	2	99	4	36	46	30	60
	100	195	28	26	145	2	99	4	36	48	30	60
	160	195	38	26	145	2	99	4	36	58	30	75
	260	215	46	26	165	7	92	8	36	66	30	80
	420	235	58	29	171.5	7	92	8	36	78	30	85
80	10/16	200	20	18	160	2	132	8	49/75	40	49	40
	25/40	200	24	18	160	2	132	8	49/75	44	49	40
	63	215	28	22	170	2	132	8	36	48	30	60
	100	230	32	26	180	2	132	8	36	52	30	60

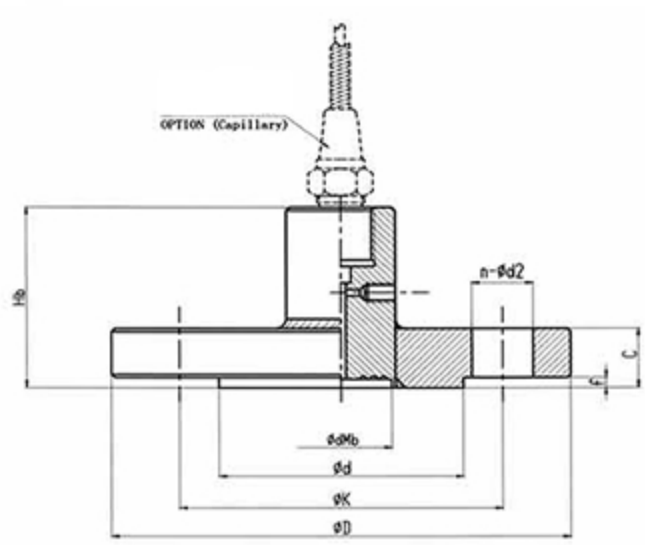

[ANSI B16.5]

DN [in.]	PN [class]	(DIMENSION) [mm]							A		B	
		D	C	d2	K	f	d	n	dMa	Ha	dMb	Hb
1/2	150	90	14	16	60.5	1.6	35	4	-	-	-	-
	300	95	16	16	66.5	1.6	35	4	-	-	-	-
3/4	150	100	16	16	70	1.6	43	4	-	-	30	55
	300	120	18	20	82.5	1.6	43	4	-	-	30	55
1	150	110	16	16	79.5	1.6	51	4	49	40	30	55
	300	125	18	20	89	1.6	51	4	49	40	30	55
	600	125	24	20	89	6.4	51	4	49	44	30	65
	900/1500	150	37	26	101.5	6.4	51	4	30	57	30	75
1 1/2	150	130	22	16	98.5	1.6	73	4	49/56	42	49	60
	300	155	22	22	114.5	1.6	73	4	49	42	49	60
	600	155	29.5	22	114.5	6.4	73	4	49	50	49	70
	900/1500	180	39	30	124	6.4	73	4	49	59	49	75
2	150	150	20	20	120.5	1.6	92	4	49/56	40	49	60
	300	165	22.5	20	127	1.6	92	8	49	43	49	60
	600	165	32	20	127	6.4	92	8	36	52	30	70
	900/1500	215	45	26	165	6.4	92	8	36	65	30	75
3	150	190	24	20	152.5	1.6	127	4	49/56	44	49	70
	300	210	29	22	168.5	1.6	127	8	49/56	49	49	75
	600	210	38.5	22	168.5	6.4	127	8	36	59	30	85
	900	240	45	26	190.5	6.4	127	8	36	65	30	90
	1500	270	54.5	33	203	6.4	127	8	36	75	30	95
4	150	230	24	20	190.5	1.6	158	8	49/56	44	49	70
	300	255	32	22	200	1.6	158	8	49/56	52	49	75
	600	275	45	26	200	6.4	158	8	36	65	30	85
	900	295	51	32	235	6.4	158	8	36	71	30	95
	1500	310	60.5	36	241.5	6.4	158	8	36	81	30	95

DF4 Angle Adjustable

DF4A

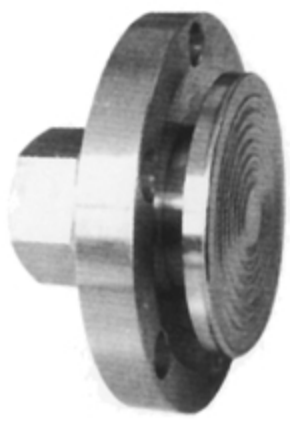

DF4B

Special items

- High temperature: Max 240℃
- Diaphragm material: Hastelloy C, Tantalum,Titanium, Monel, 316L PTEE coated
- Flange material: 316, 316L
- Instrument connection: other on request
- Filling liquid: As different media, optional Fluorocarbon oil, −60..+120℃,Food oil −20..+160℃
- Capillary: max length 10m, material 304 covered with 304 armour, other on request

Specifications

- Range: 0-0,3/0-400 Bar
- Accuracy: ± 1.6%
- Working Temperature: −45..+150℃
- Diaphragm Material: 316L
- Flange material: 304
- Flange standard: ANSI B 16.5
  DIN 2501
- Filling liquid: Silicone oil

Dimensions (mm.)

DF4A

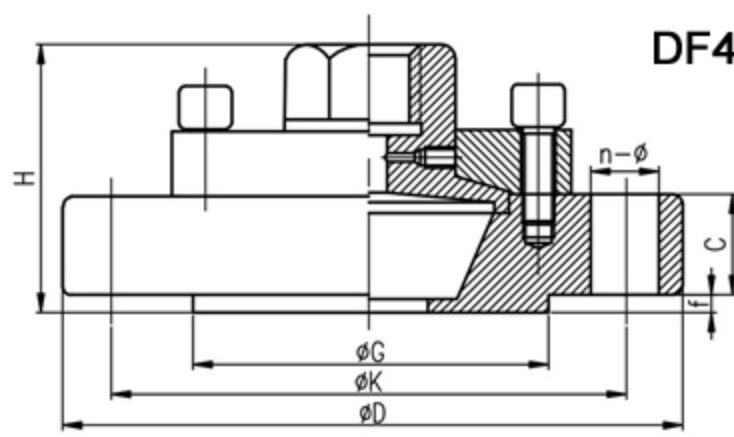

DF4B

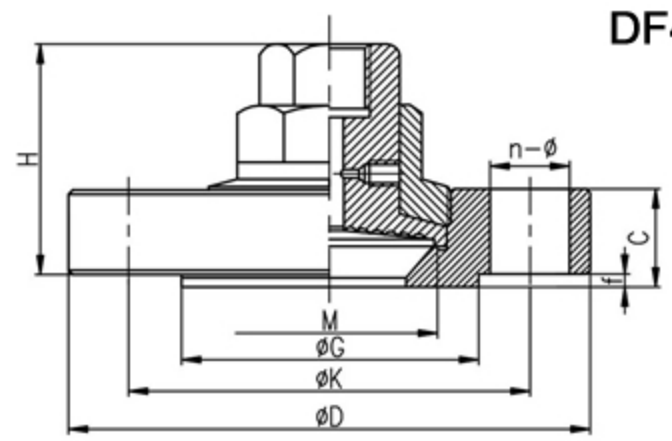

DF5-A Extended Diaphragm Seals With Flanged Connection

Special items

- High temperature: Max 240℃
- Diaphragm material: Hastelloy C, Tantalum,Titanium, Monel, 316L PTFE coated
- Flange material: 316, 316L
- Instrument connection: other on request
- Filling liquid: As different media, optional fluor–ocarbon oil, –60..+120℃,Food oil –20..+160℃
- Extension: other on request
- Capillary: max length 10m, material 304

Specifications

- Range: 0-0,6/0-400 Bar
- Accuracy: ± 1.6%
- Working Temperature: –45..+150℃
- Diaphragm Material: 316L
- Flange material: 304
- Flange standard: ANSI B 16.5
  DIN 2501
- Extension: 0–300mm

DF5-B

Dimensions (mm.)

DF5 B

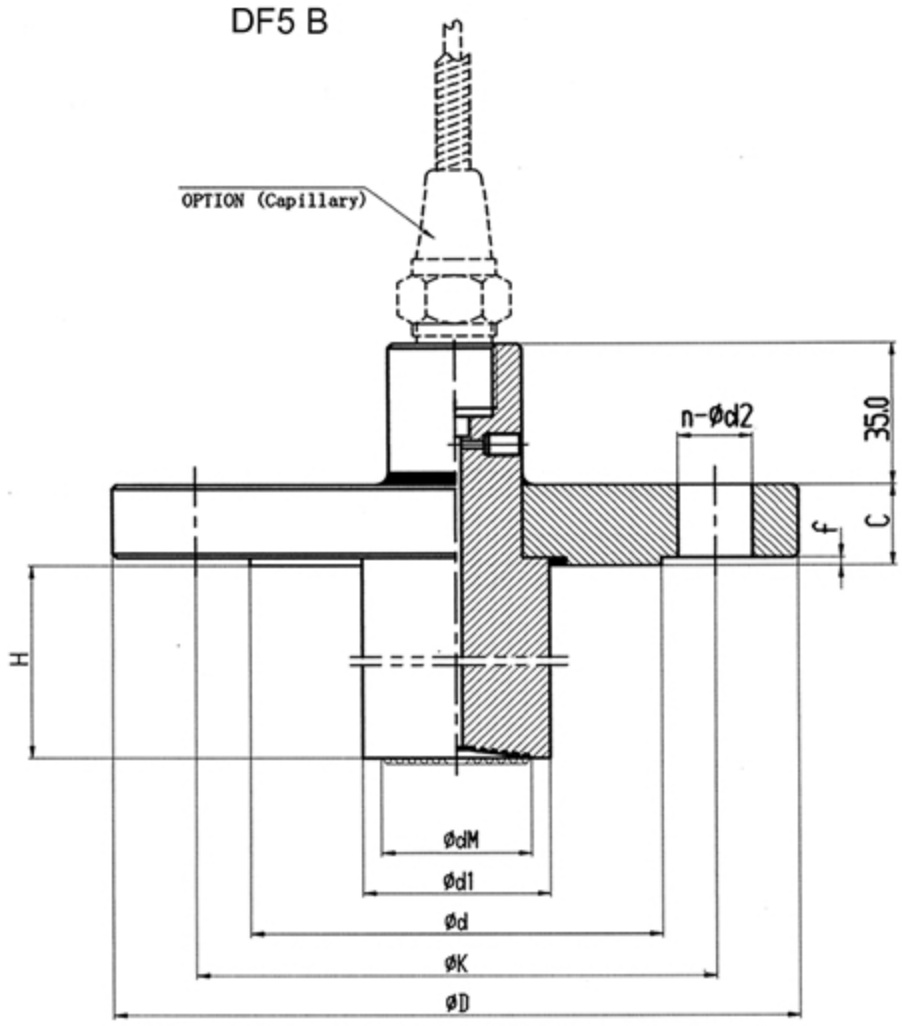

Flange [ANSI B16.5]

DN [in]	PN [bar]	(DIMENSION) [mm]							dM	H
		D	C	d2	K	f	d	n		
1 1/2	150	130	22	16	98.5	2	73	4	30	10~150
	300	155	22	22	114.5	1.6	73	4	30	10~150
	600	155	29.5	22	114.5	6.4	73	4	30	10~150
	900/1500	180	39	30	124	6.4	73	4	19	10~150
2	150	150	20	20	120.5	1.6	92	4	36	10~150
	300	165	22.5	20	127	1.6	92	8	36	10~150
	600	165	32	20	127	6.4	92	8	30	10~150
	900/1500	215	45	26	165	6.4	92	8	19	10~150
3	150	190	24	20	152.5	1.6	127	4	49	10~150
	300	210	29	22	168.5	1.6	127	8	36	10~150
	600	210	38.5	22	168.5	6.4	127	8	30	10~150
	900	240	45	26	190.5	6.4	127	8	19	10~150
	1500	270	54.5	33	203	6.4	127	8	19	10~150
	2500	305	72.5	36	228.5	6.4	127	8	19	10~150

Flange (DIN)

DN [mm]	PN [bar]	(DIMENSION) [mm]							dM	H
		D	C	d2	K	f	d	n		
40	10/40	150	18	18	110	2	84	4	30	10~150
	63/100	170	26	22	125	2	84	4	30/19	10~150
50	10/40	165	20	18	125	2	99	4	36/30	10~150
	63	180	26	22	135	2	99	4	19	10~150
	100	195	28	26	145	2	99	4	19	10~150
80	10/16	200	20	18	160	2	132	8	49	10~150
	25/40	200	24	18	160	2	132	8	36/30	10~150
	63	215	28	22	170	2	132	8	19	10~150
	100	230	32	26	180	2	132	8	19	10~150

DF5A DN ≥ 40 DN ≥ 2"

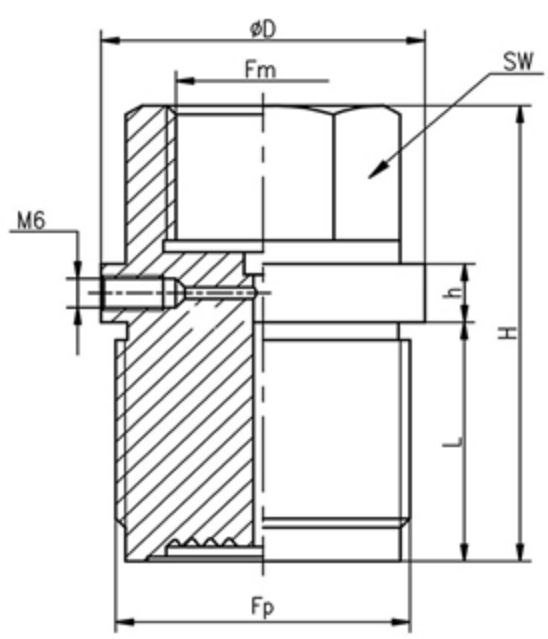

Fp	D	H	h	L	SW
G1 1/2"	70	80	10	50	32
G1 1/4"	52	70	10	45	32
G1"	44	70	10	35	32
G3/4"	42	55	10	25	32

DF6 Sanitary diaphragm seals

Special items

- High temperature: Max 180℃
- Diaphragm material: Hastelloy C, Tantalum,Titanium, Monel, 316L PTFE coated
- Wetted material: 316, 316L
- Gauge Connection: Thread M20*1.5,1/2" NPT
- Filling liquid: As different media, optional Fluorocarbon oil, –60..+120℃, Food oil –20..+160℃
- Process connection: please refer to next page

DF7

Specifications

- Range: F6: 1-0/0-16 Bar; F7: 1-0/0-40 Bar
- Accuracy: ±1.6%
- Working Temperature: –45..+150℃
- Diaphragm Material: 316L
- Wetted material: 316+Silicone gasket
- Gauge Connection: Thread M20*1.5,1/2" NPT
- Filling liquid: Glycerine oil
- Process connection: please refer to next page

Dimensions (mm.)

DF6

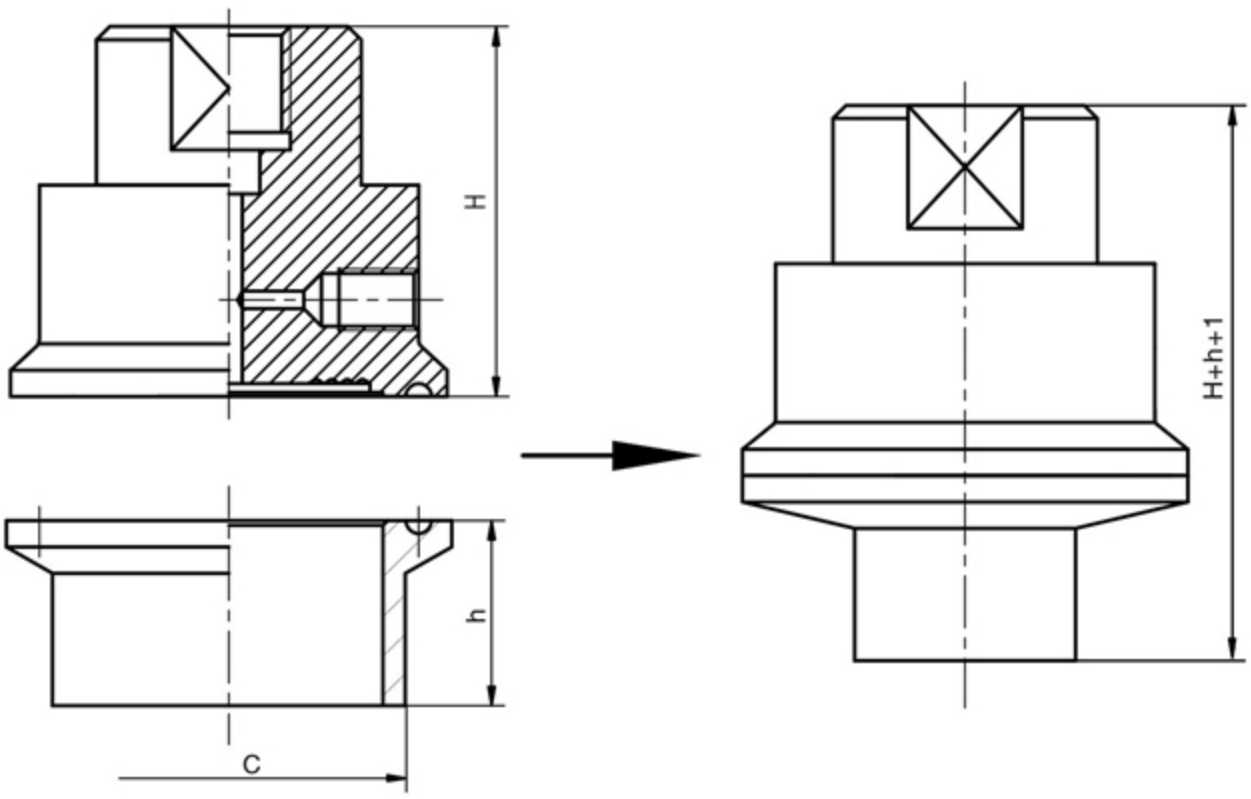

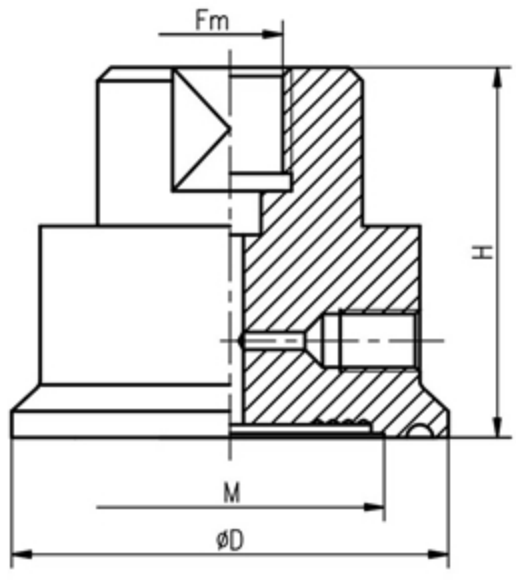

DN	D	H	h	C	M
1"	50.5	42.5	21	25.4	35.5
1.5"	50.5	42.5	21	38.1	35.5
2"	64	42.5	21	50.8	35.5
2.5"	77.5	42.5	21	63.5	58

Dimensions (mm.)

DF7

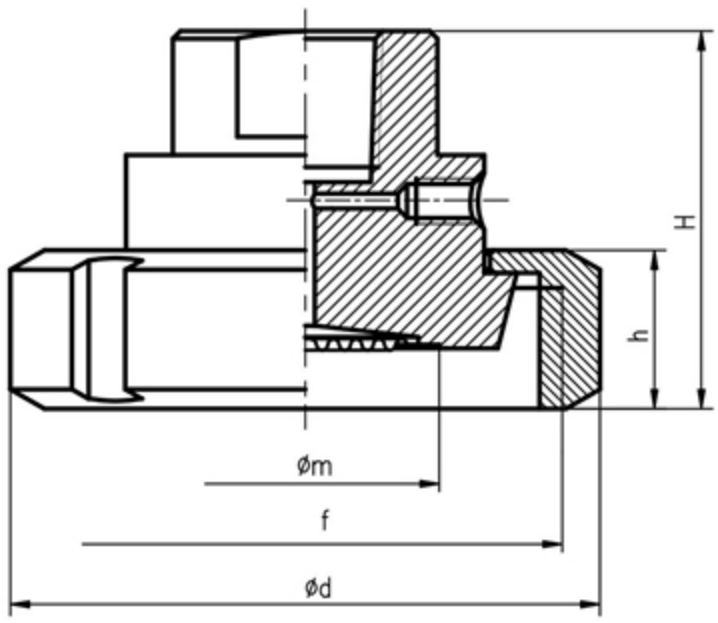

DIN 11851

DN	H	h	d	m	f
25	44	21	63	35	Rd52 × 1/6
32	49	21	68	35	Rd58 × 1/6
40	49	21	76	42	Rd65 × 1/6
50	50	22	90	50	Rd78 × 1/6
65	52	24	110	58	Rd95 × 1/6

SMS 681

DN	H	h	d	m	f
1.5"	51	23	72	35	Rd60 × 1/6
2"	51	23	82	50	Rd70 × 1/6
2.5"	51	25	98	58	Rd85 × 1/6

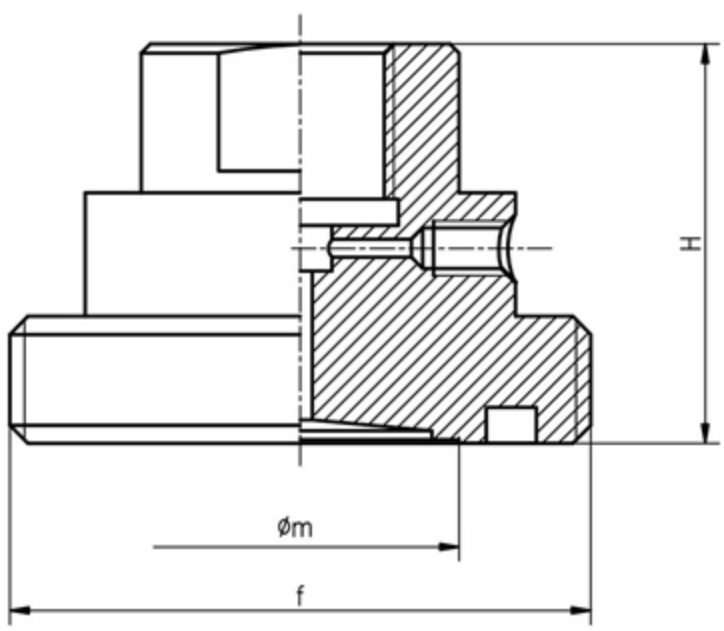

DIN 11851

DN	H	m	f
25	46	35	Rd52 × 1/6
32	46	35	Rd58 × 1/6
40	46	35	Rd65 × 1/6
50	46	42	Rd78 × 1/6
65	46	58	Rd95 × 1/6

SMS 681

DN	H	m	f
1.5"	46	35	Rd60 × 1/6
2"	46	42	Rd70 × 1/6
2.5"	46	42	Rd85 × 1/6

DF8 Welded One–piece Diaphragm Seals

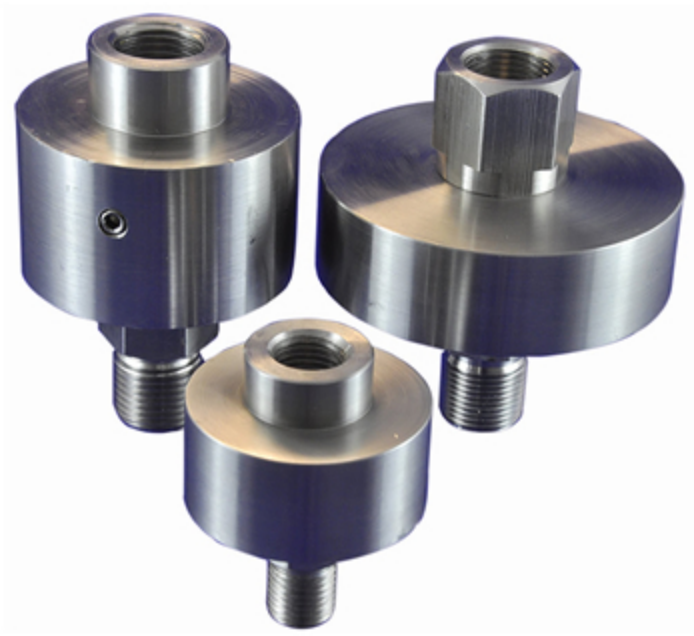

Special items

- High temperature: Max 240℃
- Diaphragm material: Hastelloy C, Tantalum, Monel
- Body material: 316, 316L
- connection: other on request
- Filling liquid: As different media, optional fluorocarbon oil, –60··+120℃,Food oil –20··+160℃

Specifications

- Range: DAMH 0-6/0-600 Bar
  DAMM 0-4/0-600 Bar
  DAMS 0-16/0-600 Bar
  DAMG 0-1/0-160 Bar
- Accuracy: ±1.6%
- Working Temperature: –45··+150℃
- Diaphragm Material: 316L
- Body material: 304
- Connection: Thread 1/2" NPT, R 1/2", M20x1.5
- Filling liquid: Silicone oil

Dimensions (mm.)

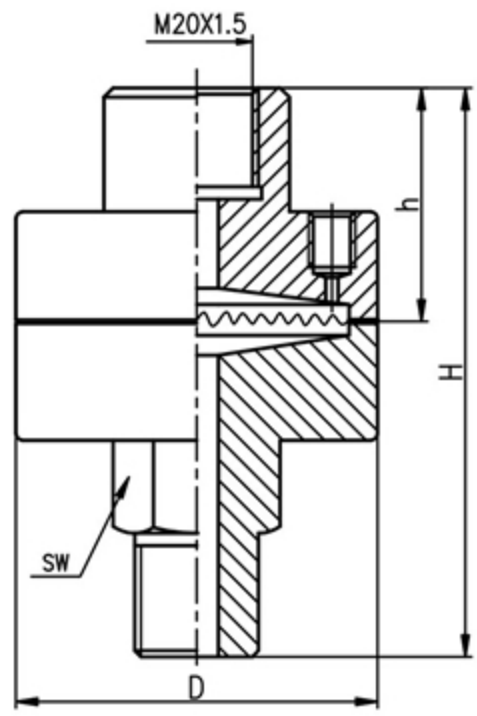

Type	D	H	h	SW
Φ34 DAMH	34	54	30	24
Φ58 DAMM	57.1	74	47	24
Φ62 DAMS	62	87	47	24
Φ88 DAMG	82	84	47	24

DF10 In Line Diaphragm Seals

Special items

- High temperature: Max 240℃
- Diaphragm material: Hastelloy C, Tantalum, Titanium, Monel, 316L PTFE coated
- Instrument connection: other on request
- Process connection: Flanged connection
- Filling liquid: As different media, optional fluorocarbon oil , –60..+220℃,Food oil –20 .. +160℃
- Capillary: Maximum length 10m, material 304 covered with 304 armour, other on request
- Hold temperature: Threaded connection, Thread can be made on request

Specifications

- Range: 0-0,6/0-250 Bar
- Accuracy: ± 1.6%
- Working Temperature: –45..+150℃
- Diaphragm Material: 316L
- Wetted material: 304
- Process connection: welded
- Standard: ANSI B36.1
  DIN248
- Filling liquid: Silicone oil

Dimensions (mm.)

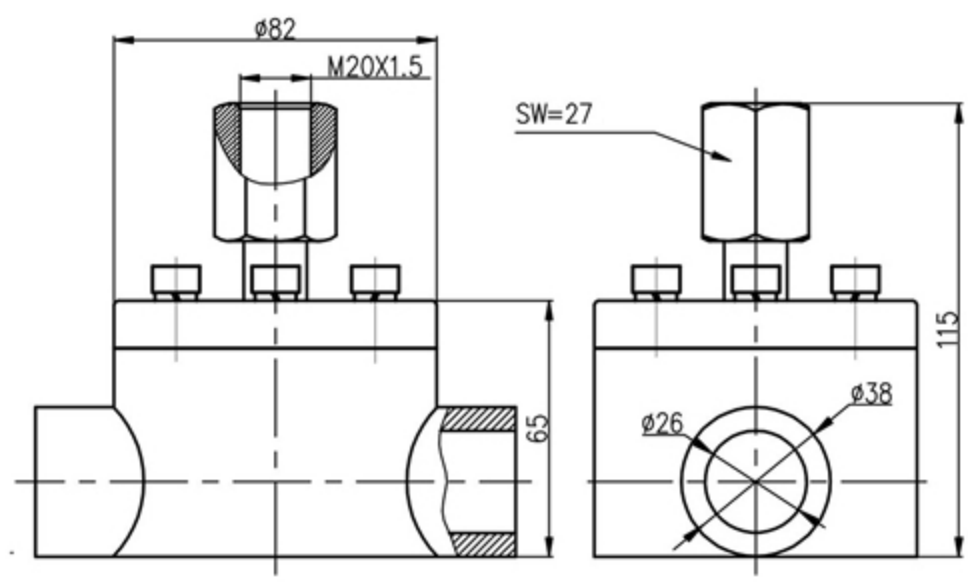

Homogeniser Pressure Gauge

HM

Summary

Homogeniser hygienic seal fitted to 100mm diameter pressure gauge suitable for food, dairy and pharmaceutical applications up to pressure of 1600 bar.
Designed for homogeniser applications where the process media would solidify, block or clog a conventional bourdon tube style pressure gauge and where a high degree of inline cleaning or sterilising is required. Seal fill is oil approved for food service applications.

Technical Specifications

- Diameter: 100 mm.
- Accuracy: 1.6% of F.S.
- Range: 0..1600 Bar
- Overpressure protection: P_{max} +30%
- Protection class: IP65
- Process temperature: -10 °C..+120 °C
- Diaphragm: AISI 316 L SS
- Connection: Homogeniser type
- Connection flange: AISI 316 SS
- Case: AISI 304 SS
- Glass: Tempered glass 3 mm.
- Sensing element: Brass or Stainless Steel Bourdon
- Movement: Brass or Stainless Steel,
- Pointer: Black aluminum, micrometric adjustable
- Scale: White painted aluminum

Measurement Ranges			
0~25 Bar	0~40 Bar	0~60 Bar	0~100 Bar
0~160 Bar	0~250 Bar	0~400 Bar	0~600 Bar
0~1000 Bar	0~1200 Bar	0~1400 Bar	0~1600 Bar

Dimensions

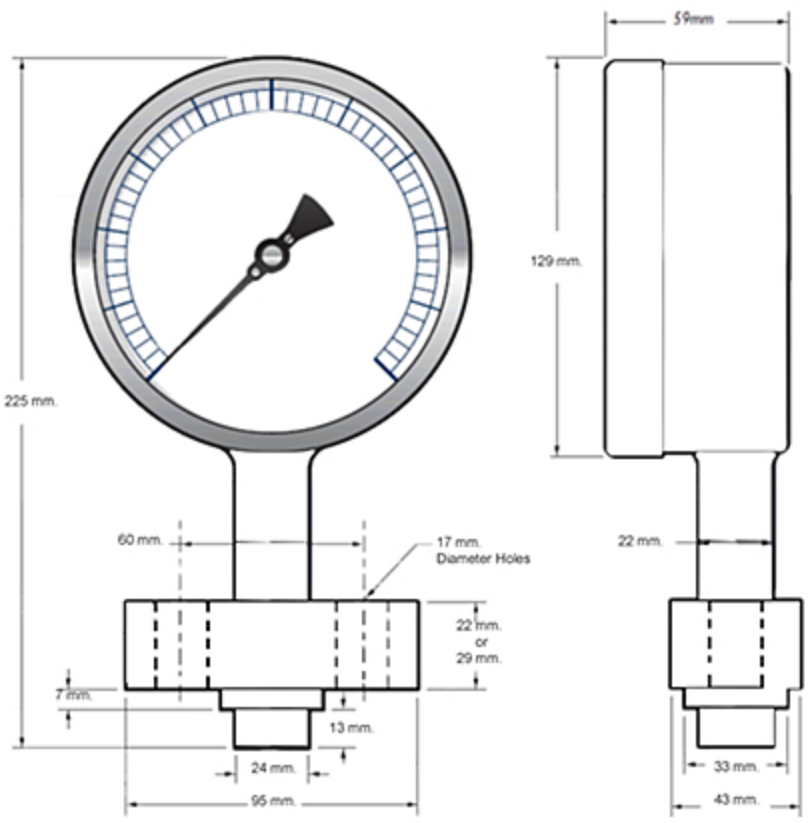

How to Order

Please specify the following properties when the manometer ordering.

- Model number,
- Dial size (100 mm.),
- Dry or Liquid filled (GD=Glycerin filled, SD=Silicone filled),
- Range and pressure unit,
- Connection type, (Homogeniser type),
- Flanged (F) or Flangless (NF),
- (If necessary, accessories,special connection special scale..)

For example: *HM-100-250-(0/100 Bar)-F*

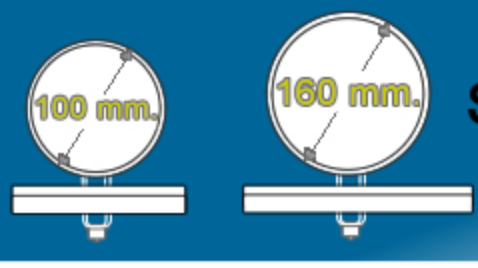

Stainless Steel Horizantal Diaphragm Gauges

YMN-P

Features

- Minimum range 10 mBar
- Oil filled vibration proof type is optional
- PTFE cover

Product overview

YMN-Ptype Stainless Steel Corrosion–Proof Diaphragm Gauges are built for measuring low pressure of gas or liquid in chemical, petroleum, textile industries, where strong corrosion and viscous media (non–crystallized) are a concern. Different diaphragm materials are available to be compatible with process fluids.

Technical Specifications

- Accuracy: ±2.5%
- Range: -100 mbar,-40 mbar, -25 mBar.. and any connection of positive / negative pressure.
- Nominal size: 100mm, 160mm
- Working pressure: Steady: 3/4 of full scale value; Fluctuating: 3/2 of full scale value; Short time: full scale value.
- Ambient temperature: –40℃ ~ 60℃
- Diaphragm material: AISI 316L, PTFE coated
- Case material: AISI 304
- Connection body: AISI 316, 316L Fluorin painting
- Movement material: AISI 304
- Seal material: fluorine rubber
- Protection: Type YMN-P/IP55; Type YMN-P/IP65 (Liquid filled)
- Liquid filling: glycerine (silicon oil and others)
- Connection: 1) thread connection G 1/2", 1/2" NPT,..
  2) Flanged connection depend on requests from customers.
- Flange material: AISI 304, 316, 316L, 316L PTFE coated or lining

TABLE OF RANGES		
-10 mBar	10 mBar	1.6 Bar
-16 mBar	16 mBar	2.5 Bar
-25 mBar	25 mBar	4 Bar
-40 mBar	40 mBar	6 Bar
-60 mBar	60 mBar	10 Bar
-100 mBar	100 mBar	16 Bar
-160 mBar	160 mBar	25 Bar
-250 mBar	250 mBar	
-400 mBar	400 mBar	
-600 mBar	600 mBar	
-1 Bar	1 Bar	

How to Order

Please specify the following properties when the manometer ordering.

- Model number,
- Dial size,
- Dry or Liquid filled (GD=Glycerine filled, SD=Silicone filled)
- Range and pressure unit
- Connection thread,
- Accuracy,
- (If necessary; special scale,..)

For example: *YMN-P-100-(0/10 mBar)-R1/2-1.6*

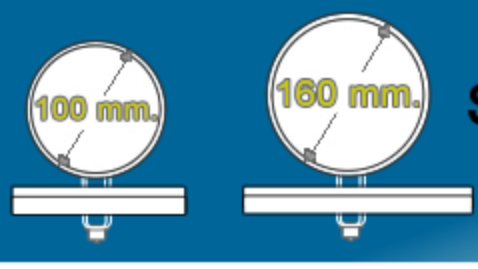

Stainless Steel Horizantal Diaphragm Gauges

YMN-P

Dimensions (mm.)

Thread connection

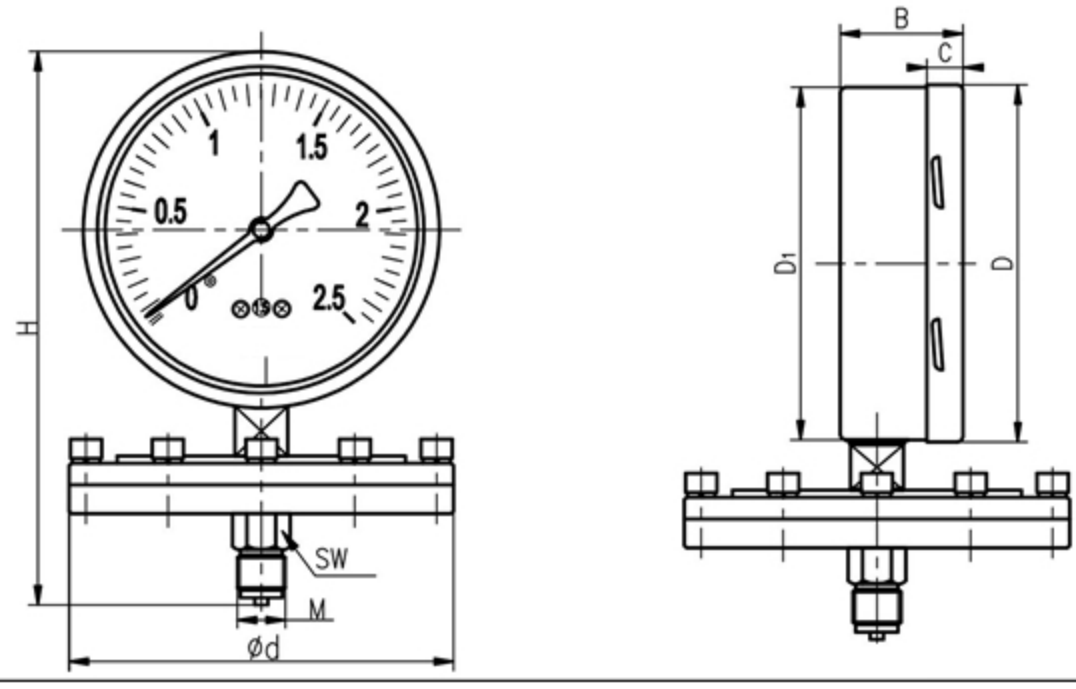

Flanged connection:
Standard flange or custom manufacturing.

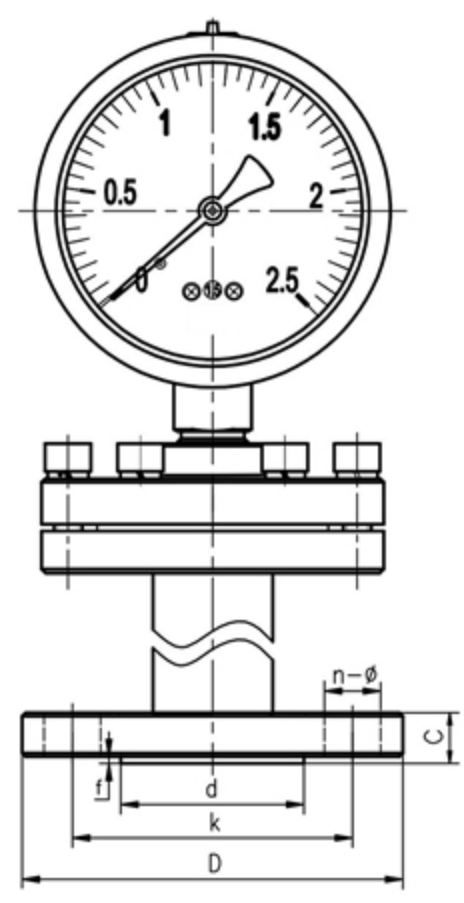

Range (Bar)	Gauge Dimensions mm							
	Φd	D	D1	B	C	M	H	SW
≤0. 25	160	Φ101	Φ99	50	17	M20 × 1.5/NPT1/2	184/181	24
		Φ161	Φ159	50	17	M20 × 1.5/NPT1/2	244/241	24
≥0.4	100	Φ101	Φ99	50	17	M20 × 1.5/NPT1/2	186/183	24
		Φ161	Φ159	50	17	M20 × 1.5/NPT1/2	246/243	24

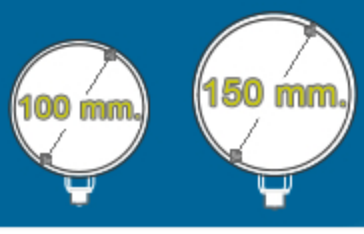

Current Output Pressure Gauge

TR-MN

Summary

The pressure transmitter has the functions of spot display and output distance. The display part is a bourdon tube pressure gauge and pressure transmitter,relevant apparatus to be the output part. This product is widely used in petrochemical,pharmacy, steel making and so on.

The transmitters are intrinsically safe style designed and manufactured in accordance Standard of IEC/EN 60079 for the electric equipment used in hazardous areas.

The gauge also can be matched with Teknopoli diaphragm seals to measure the caustic, ropy and crystal medium.

Features

- Imported sensor as measuring element with high accuracy and quick response;
- Designed with foreign advanced electric circuit for reliability and stability;
- Compact, light, simple and easy for installation, maintenance and operation;
- Pressure values can be read at spot while the electrical signal outputs.

How to Order

Please specify the following properties when the Manometric Transmitter ordering.

- Model number,
- Dial size,
- Range and pressure unit,
- Connection thread,
- Accuracy,
- (If necessary; special scale,accessories, diaphragm seals..)

For example: *TR-MN-P-150-(0/10 Bar)-R1/2-1.6-4/20 mA*

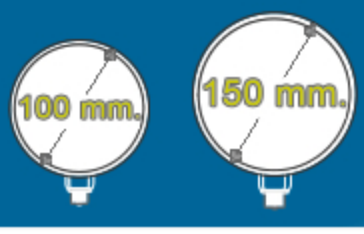

Current Output Pressure Gauge

TR-MN

Specifications

Range	Φ100mm: -1 Bar ~ 250 Bar, Φ150mm:-1 Bar ~ 600 Bar
Connection	G 1/2", 1/2" NPT, M20 × 1.5 male (or others on requests)
Diameter	Φ100mm / Φ150mm
Working voltage	24V.DC (+10%–5%)
Signal output	4 ~ 20mA DC (2–line) 1 ~ 5V.DC (3–line)
Accuracy	Signal output ± 0.5%, Local display ± 1.5%
Loading resistance	(VS–12) /20 (VS Working voltage)
Overpressure limited	130%
Working temperature	–10℃ ~ +55℃
Temperature error	< 0.3%/10℃
Element	Ceramic sensor
Case	AISI304
Dial	Aluminium alloy, black letters in white ground
Window	Tempered glass
Junction box	PVC
Protect class	IP54

Dimensions (mm.)

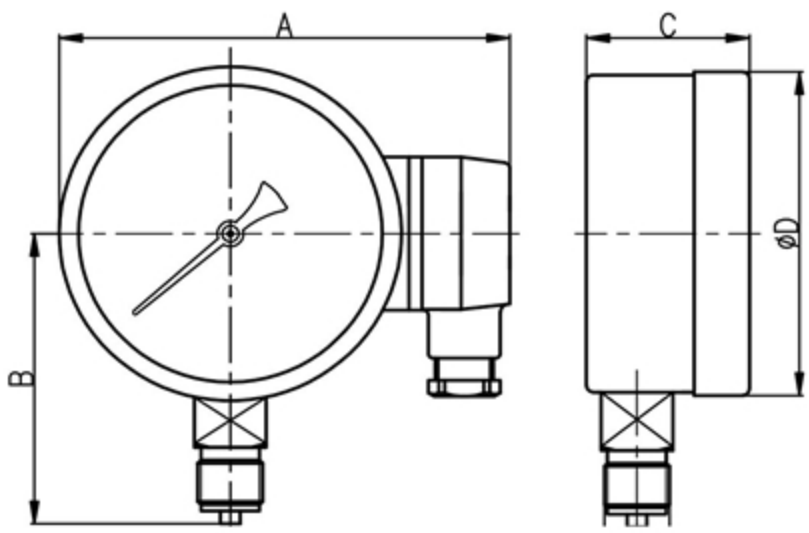

Dimensions	A(mm)	B(mm)	C(mm)	D(mm)	d(mm)
Diameter 100mm	142	85	50	101	G 1/2", 1/2" NPT, Or other specifications
Diameter 150mm	188	117	50	149	

Eryaman AVM. 2.Cad.No:11/50 06793 Ankara-TURKEY • Tel: +90 312 279 44 51 • Fax: +90 312 279 55 58 • e-mail: info@teknopoli.com • web: http://www.teknopoli.com

Loading characters

See the chart as follow. Suggest the supply Us to be 24V.

The connected gauge should be R_L=250Ω. If you choose other date for Us and R_L,The R_L can not exceed

$$R_L = \frac{V_S - 12}{0.02}.$$

Use wires to seal the holes on the sides of the transmitter or install the signal wire to the holes and fix by tight nut. The hole without used should be sealed.

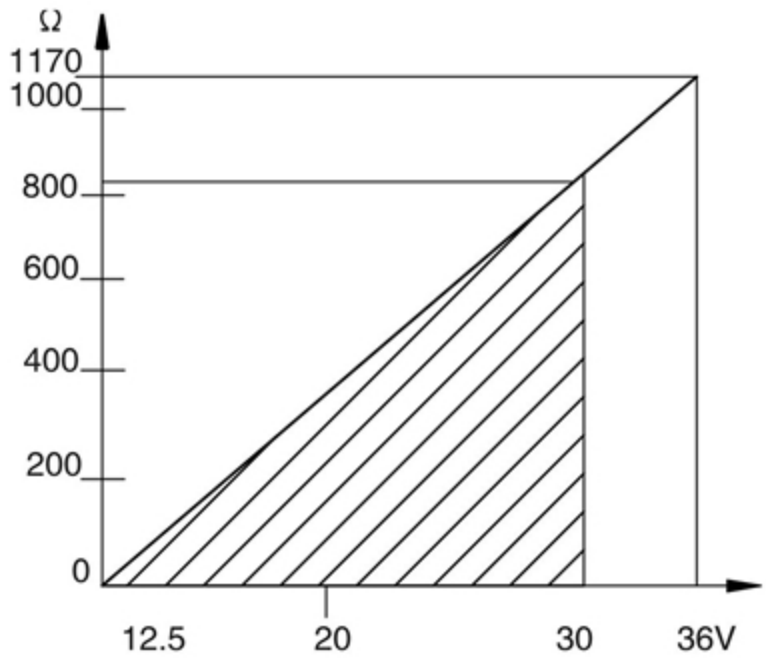

Connecting and debugging

TR-MAN

pressure transmitter wire diagram

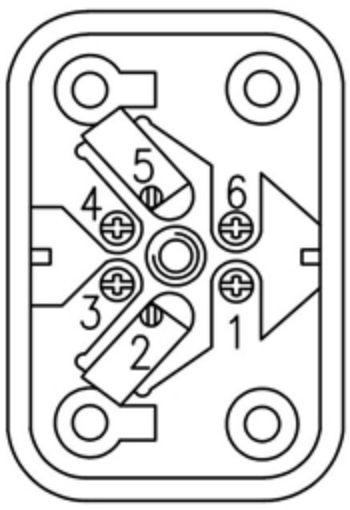

5 "zero" adjustment
2 full pressure range adjustment
6 output "+"
1 output "–"
⏚ earth (3 or 4)

Input: 12~36VDC
Output: 4~20mA 1~5V
Accuracy: 0.5%

Installation notes

1. Direct install to the measuring point (any angles).
2. It is better to be with less temperature fluctuation and avoid the strong vibration.
3. If it is needed to install outside of the house, it is better to put it into a protect case to avoid sun and rain.
4. While measuring the high temperature mediums, please do not exceed the temperature limitation. If necessary, fit it with cooling devices.
5. Add pressure cut–off valve between the transmitter and the medium and add the dampers if the pressure changes a lot.

YS2 Standart Pressure Transmitter

YS-2

Summary

Use Ceramic Piezoresistance as the sensitive element,cheap,but high precision and reliability.(Standard type YS2 (YS–2) Pressure transmitler) The product has regular connection ,compact design,disturbing–proof,light and easy to install,widely is used in industrial field and experiment chamber,especially suitable for the measurement of compatible gas and liquid.

- Use sensor of Ceramic Piezoresistance
- Measurement of Gauge pressure and negative pressure.
- Range: –100kPa~40MPa
- Output 4~20mA or 1~5V、0~5V、0~10V
- Simple structure ,easy to install
- Pretty appearance and compact design.

Working Principle

Corrosion–proof ceramic pressure transmitter has no transmission of liquid. When pressure is made on the face of ceramic diaphragm, litter distortion is formed.Thickfilm resistance is printed on the reverse of ceramic, con–necting a wheatstone bridge. Resulting from effect of Ceramic Piezoresistance, one linear voltage signal which is direct ratio with pressure and encouraged voltage is formed. According to different ranges, standard signal is 2.0/3.0/3.3mV, which is compatible with yingbian sensor. It has high temperature stability and time stability by laser marking, along with temperature 0~70℃, transforming media pressure to 4~20mA.DC、1 ~ 5V.DC electric signal by magnifying circuit.

How to Order

Please specify the following properties when the pressure transmitter ordering.

- Model number,
- Range,
- Signal output
- Accuracy
- Connection thread,
- (If necessary; special scale,..)

For example: *YS-2-(0/10 Bar)-4/20 mA-0.4-R1/2*

YS2 Standart Pressure Transmitter

YS-2

Specifications

Media	Any liquid, gas and steam without compatible with ceramic and 316L. (chemical seal products can resolve the corruption problem if needed by the customers)
Range	–1/0bar···0/400bar,
Accuracy	±0.25% or ±0.5%
Stability/year	≤0.2% Full scale
Temperature	(Working Temperature): –20~80℃
	(Medium Temperature): –30~80℃
	(Stock Temperature): –30~85℃
	(Temperature Compensation): 0~70℃
	(Temperature Drift): ±0.02%FS/℃
Relative humidity	0%~95%
Body	SUS304 (or other special options)
Wet part	SUS304 (or SUS316 and SUS316L for option)
Element	Ceramic Sensor/Diffuse Silicone Sensor
Over pressure	Ceramic Sensor(1.5 times) / Diffuse Silicone Sensor(2 times)
Gasket	Fluorin rubber
Zero moving	±20% of Range output
Range adjust	±20% of Range output
Supply effect	less than 0.01%/V of range output
Protect degree	IP65
Response time	≤0.1mS
Supply	17–30VDC
Load resistance	≤(U–17)/0.02Ω
Output signal	4~20mA (two–line),1~5V、0~5V、0~10V (three–line)
Electric Connection	4–pin, C–plug , as DIN43650 standard
Electric protection	Protected against polarity crossing, short circuit protection
Weight	≈0.2Kg
Process Connection	Standard M20×1.5 male thread (or other connections noted)

YS2 Standart Pressure Transmitter

YS-2

Dimensions

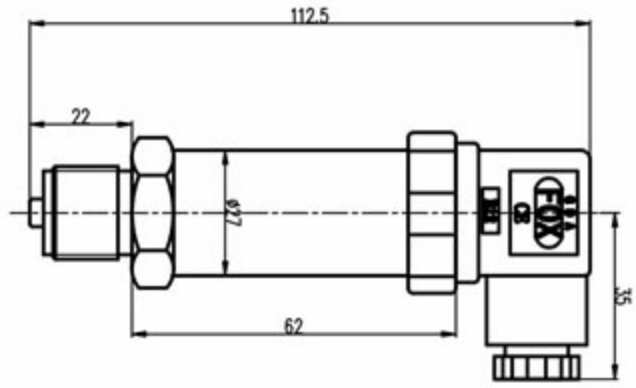

Application

- Soot management
- Air condition and cleanse equipment.
- Measurement of air and wind pressure
- Wind pressure gauge and pneumatic gauge
- Medicine gauge and leakage equipment.
- Control of liquid pressure and protection of Environment.
- Control of boiler steam.

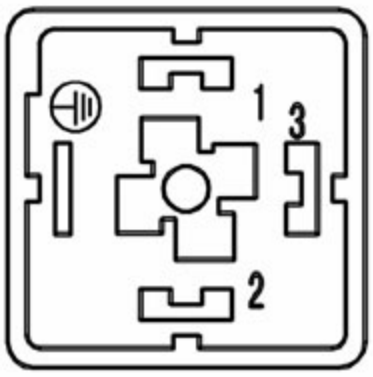

1.Power Supply + (positive)

2.Current Output + (positive)

3.NC

⏚ .Ground Wires

Adjustable Overload Protection Device AFW, AFG

- Designed for use in chemical and petrochemical power plant and pharmaceutical
- Isolate the sensing element of pressure gauges, pressures switches and pressure transmitters from process liquids
- Suitable for corrosive, nonviscous and clean gases or liquids switches and pressure transmitters from process liquids

Specifications

Diaphragm overload protection device (AFW) always attaches with chemical seals, mainly used for viscous or easy to be crystallized media.

- Setting range:0,16-16 Bar
- Over pressure limit: 0-50 Bar
- Working temperature: –25... +120℃
- Diaphragm material: 316L
- Set point accuracy: ±4%
- Wetted material: 316+BUNA
- Connection: thread M20*1.5M–M20*1.5F, 1/2"NPT M–1/2"NPT F

Piston overload protection device (AFG) for viscous and sedmentous process medium with diaphragm seal.

- Setting range: 25-400 Bar
- Over pressure limit: 0-400 Bar
- Working temperature: –25...+120℃
- Diaphragm material: 316L
- Set point accuracy: ±4%
- Wetted material: 316+BUNA
- Connection: thread M20*1.5M–M20*1.5F, 1/2"NPT M–1/2"NPT F

SPECIAL VERSIONS

- Body material: 304, 316, 316L
- Connection: other on request
- Packing material: as different process temperature and setting range VITON–25–+240℃,1.6-400 Bar

Dimensions (mm.)

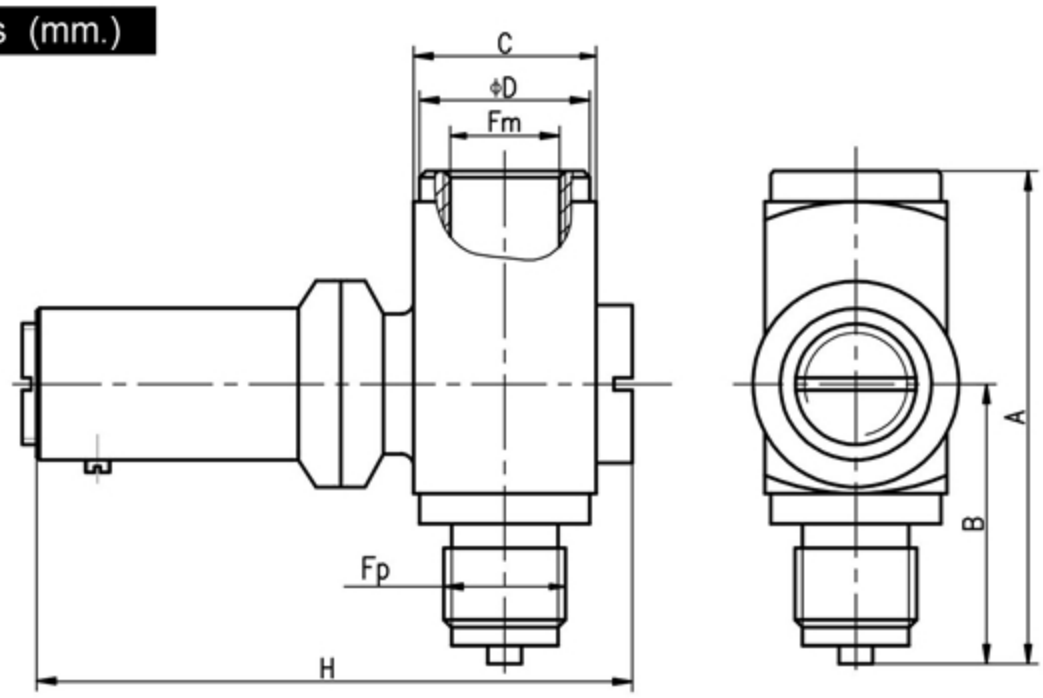

Diaphragm overload protection device

Range	A	B	C	D	H	Fp/Fm
0,16-10 Bar	78	46	30	28	98	G1/2~G1/2
	75	43	30	28	98	NPT1/2~NPT1/2

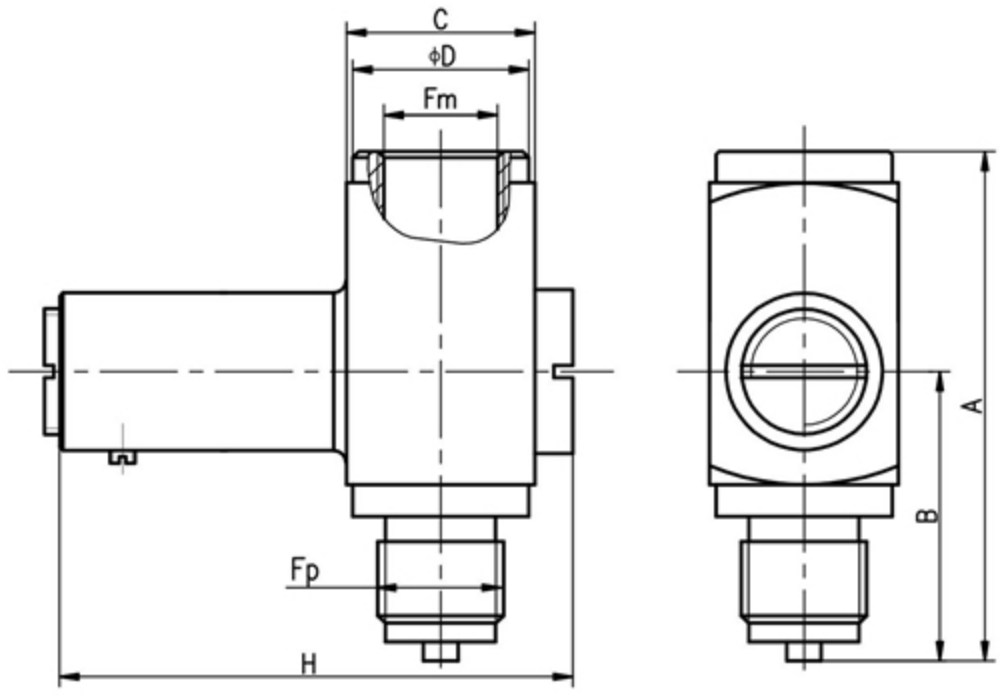

Piston overload protection device

Range	A	B	C	D	H	Fp/Fm
0,16-10 Bar	78	44	30	28	77	G1/2~G1/2
	75	41	30	28	77	NPT1/2~NPT1/2

Pressure Dampener AZ1

- Designed for use in chemical and petrochemical power plant and pharmaceutical
- Isolate the sensing element of pressure gauges, pressures switches and pressure transmitters from process liquids
- Suitable for corrosive, nonviscous and clean gases or liquids switches and pressure transmitters from process liquids

Dimensions (mm.)

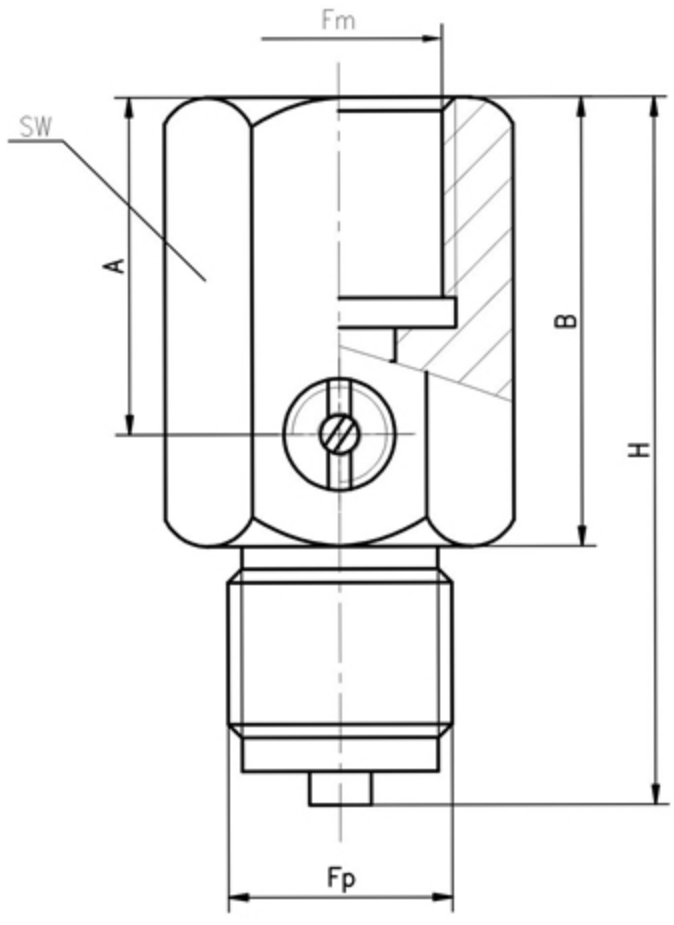

Specifications

- Nominal pressure: 0-400 Bar
- Damp adjustable range: 0–100%
- Wetted part material: 316+BUNA
- Connection: thread M20*1.5M–M20*1.5F
  1/2"NPT M–1/2"NPT F
  G1/2"M–G1/2"F

SPECIAL VERSIONS

- Body material: 304, 316 , 316L
- Sealing material: as different process temperature
  VITON -25 +240℃
- Connection: other on request

Thread	A	B	H	SW
G1/2 – G1/2	30	40	63	27
NPT1/2 – NPT1/2	30	40	60	27

Pressure radiator AR

AR1 cooling tower

Radiation rate K150=60%
Pressure Max.600 bar

AR2 Capillary radiator

Radiation rate K_{200}=65%
Pressure Max.100 bar

AR3 cooling device

Radiation rate K150=10%
Pressure Max.600 bar

AR4 condensation siphon

Pipe thickness 1mm/2mm
Pressure Max.60 bar

Dimensions (mm.)

AR1

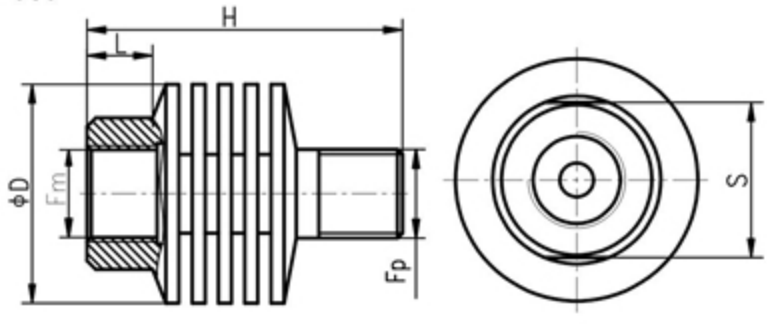

Fp/Fm	D	H	L	S
G1/2–G1/2	50	72	15	30
NPT1/2–NPT1/2	50	72	15	30

AR2

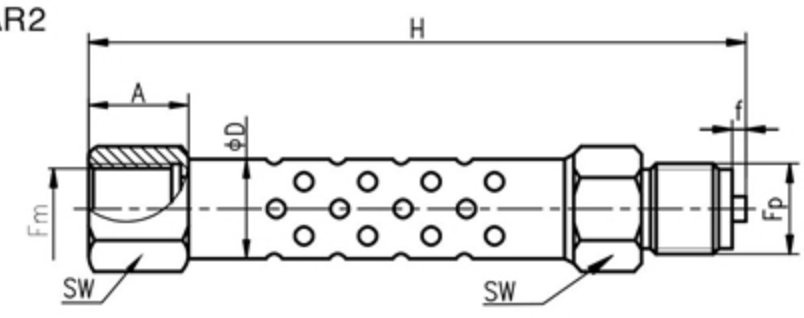

Fp/Fm	A	D	H	SW
G1/2~G1/2	21	22	147	24
NPT1/2~NPT1/2	21	22	144	24

AR3

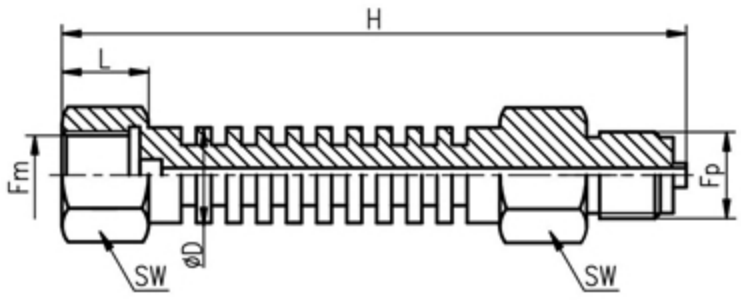

Fp/Fm	D	H	L	SW
G1/2~G1/2	22	145	20	27
NPT1/2~NPT1/2	22	142	20	27

AR4

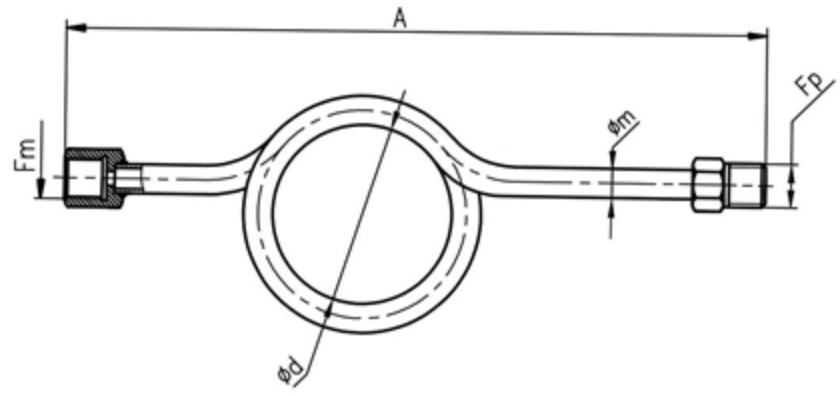

Fp/Fm	A	d	m
G1/2~G1/2	282	83	12
NPT1/2~NPT1/2	282	83	12

Dimensions (mm.)

AY1
Capillary

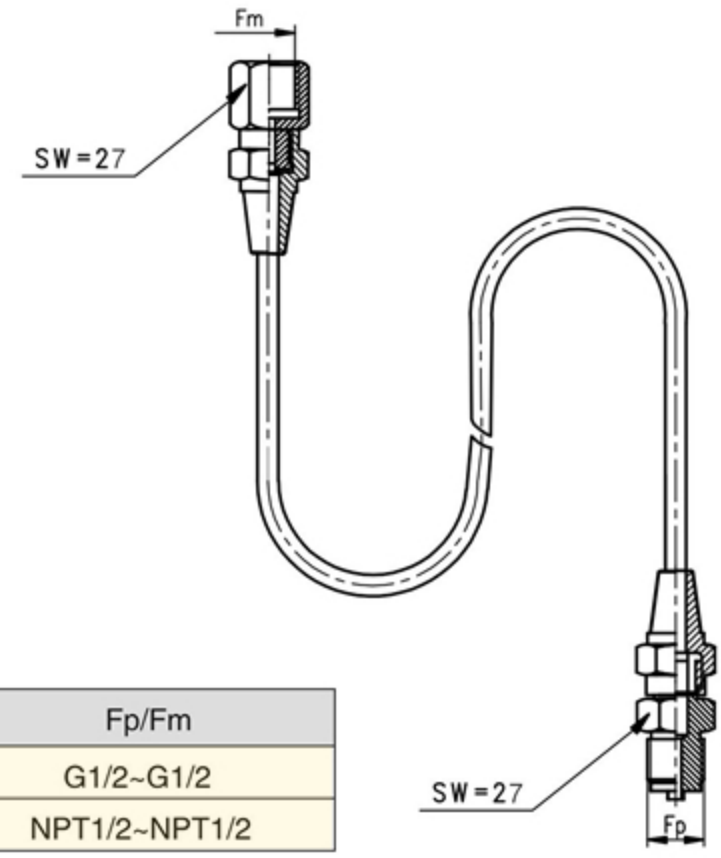

Fp/Fm
G1/2~G1/2
NPT1/2~NPT1/2

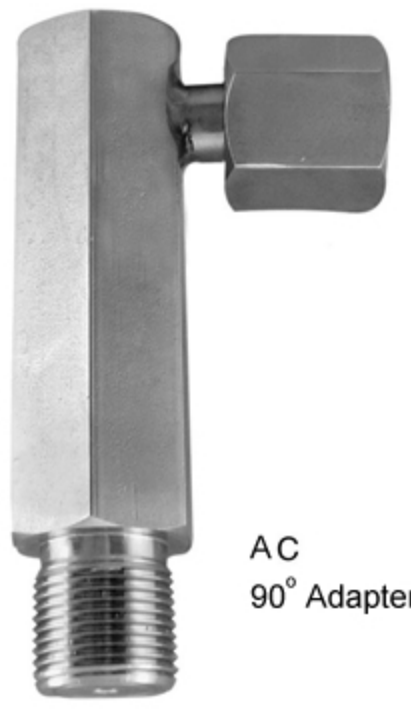

AC
90° Adapter

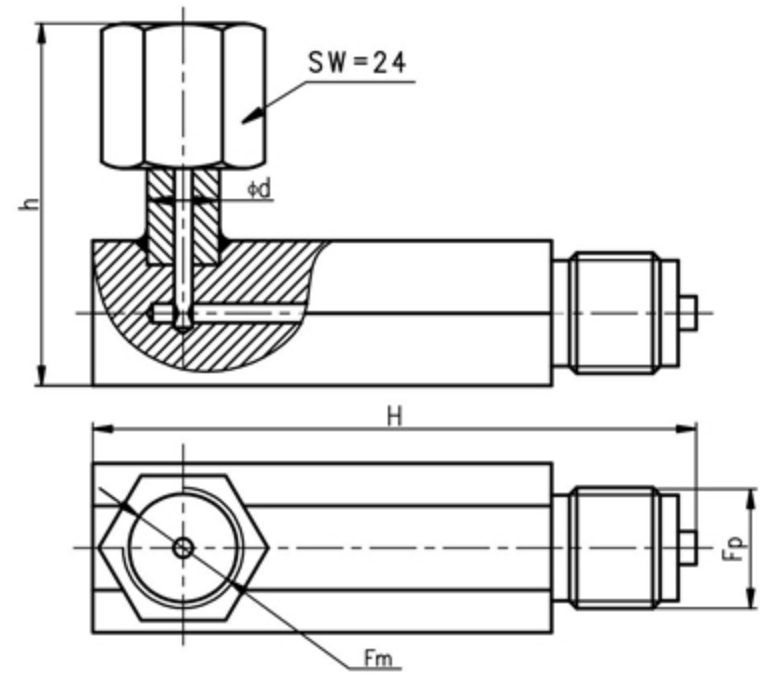

Fp/Fm	d	H	h
G1/2~G1/2	12	103	60
NPT1/2~NPT1/2	12	100	60

One Valve With A Bleeding 2FA

- Designed for use in chemical and petrochemical power plant and pharmaceutical
- Isolate the sensing element of pressure gauges, pressures switches and pressure transmitters from process liquids
- Suitable for corrosive, nonviscous and clean gases or liquids switches and pressure transmitters from process liquids

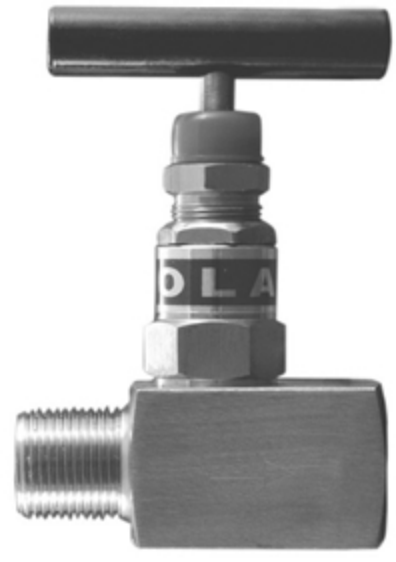

Specifications

- Nominal pressure: 0-400 Bar
- Working temperature: –30... +180℃
- Body material: 304
- Needle plug material: 316
- Packing material: PTFE
- Connection: thread M20*1.5M–M20*1.5F, 1/2"NPT M–1/2"NPT F, G1/2"M–G1/2"F

SPECIAL VERSIONS

- Material: 316, 316L
- Connection: other on request

Dimensions (mm.)

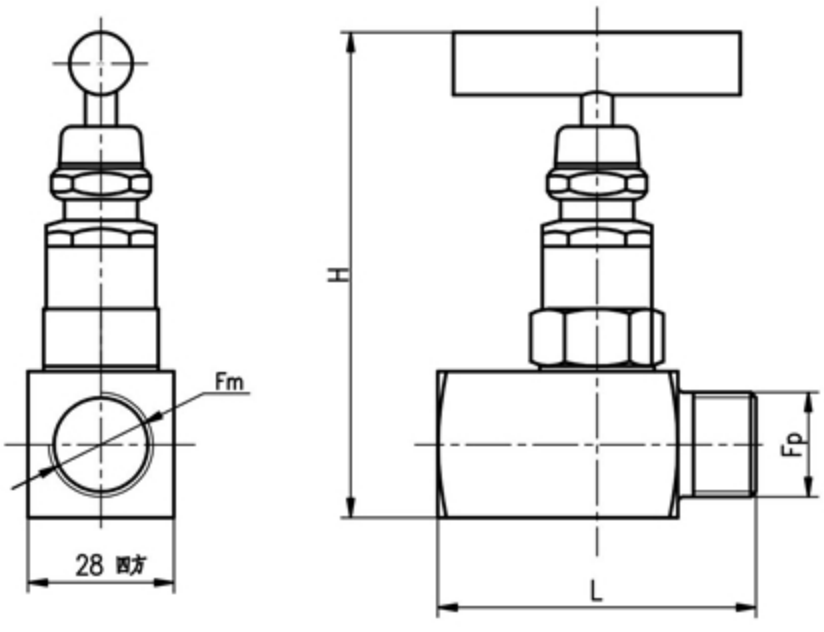

Fp/Fm	H	L
G1/2–G1/2	95	60
NPT1/2–NPT1/2	95	60

Two Valves Manifold 2FB

- Designed for use in chemical and petrochemical power plant and pharmaceutical
- Isolate the sensing element of pressure gauges, pressures switches and pressure transmitters from process liquids
- Suitable for corrosive, nonviscous and clean gases or liquids switches and pressure transmitters from process liquids

Specifications

- Nominal pressure: 0-400 Bar
- Working temperature: –30 ··· +180℃
- Body material: 304
- Needle plug material: 316
- Packing material: PTFE
- Connection: thread M20*1.5M–M20*1.5F, 1/2"NPT M–1/2"NPT F, G1/2"M–G1/2"F

SPECIAL VERSIONS

- Material: 316, 316L
- Connection: other on request

Dimensions (mm.)

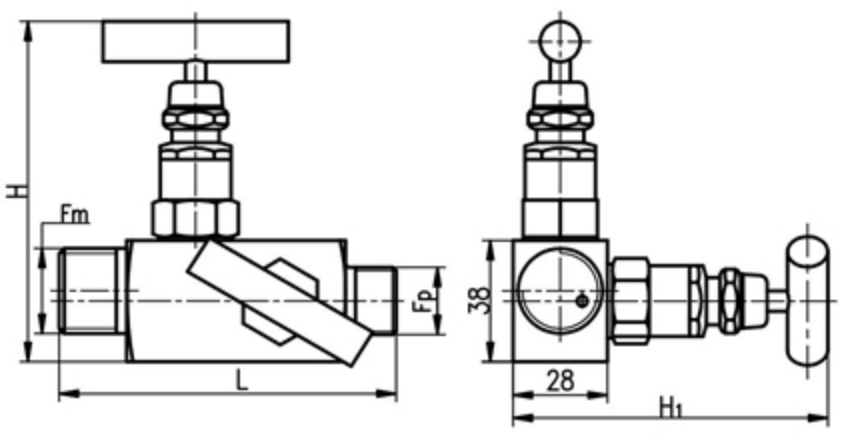

Fp/Fm	H	H1	L
G1/2–G1/2	103	90	100
NPT1/2–NPT1/2	103	90	100

Three Valves Manifold 3FC

- Designed for use in chemical and petrochemical power plant and pharmaceutical
- Isolate the sensing element of pressure gauges, pressures switches and pressure transmitters from process liquids
- Suitable for corrosive, nonviscous and clean gases or liquids switches and pressure transmitters from process liquids

Specifications

- Nominal pressure: 0-240 Bar
- Working temperature: –30··· +180℃
- Body material: 304
- Needle plug material: 316
- Packing material: PTFE
- Connection: thread M20*1.5M–M20*1.5F, 1/2"NPT M–1/2"NPT F, G1/2"M–G1/2"F

SPECIAL VERSIONS

- Material: 316, 316L
- Connection: other on request

Dimensions (mm.)

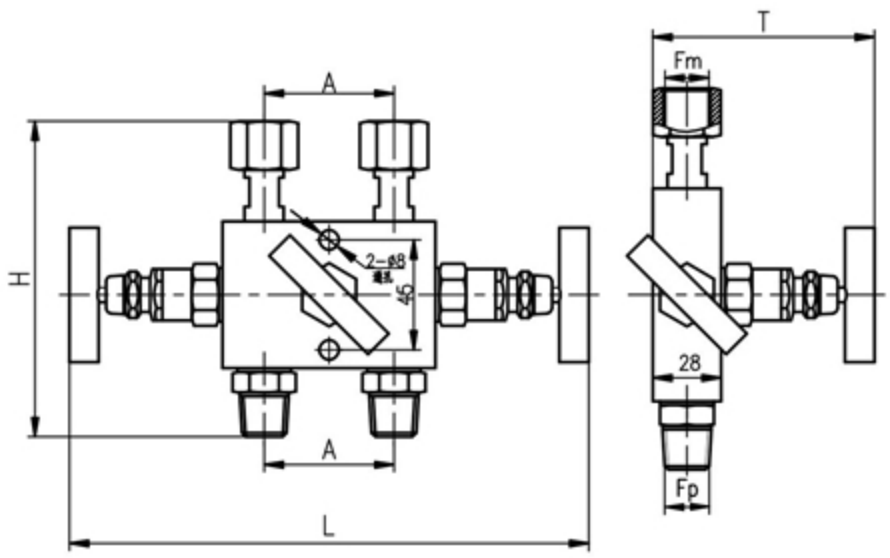

Fp/Fm	A	H	L	T
G1/2~G1/2	54	133	212	89
NPT1/2~NPT1/2	54	130	212	89

tepo

"correct measures, infallible"

teknopoli Teknik Ürünler
Eryaman AVM 2.Cadde No:11/50
06793 Eryaman/ANKARA-TR

info@teknopoli.com
http://www.teknopoli.com
http://www.tepometre.com

Tel : 0 312 279 44 51
Fax: 0 312 279 44 58

tepo markalı Manometre ve Termometreler teknopoli firmasının ürünüdür.