FLAMEPROOF SWITCHES

SPECIFIER'S GUIDE FOR

- PRESSURE SWITCHES
- PRESSURE DIFFERENCE SWITCHES
- VACUUM SWITCHES
- TEMPERATURE SWITCHES

Orion® INSTRUMENTS

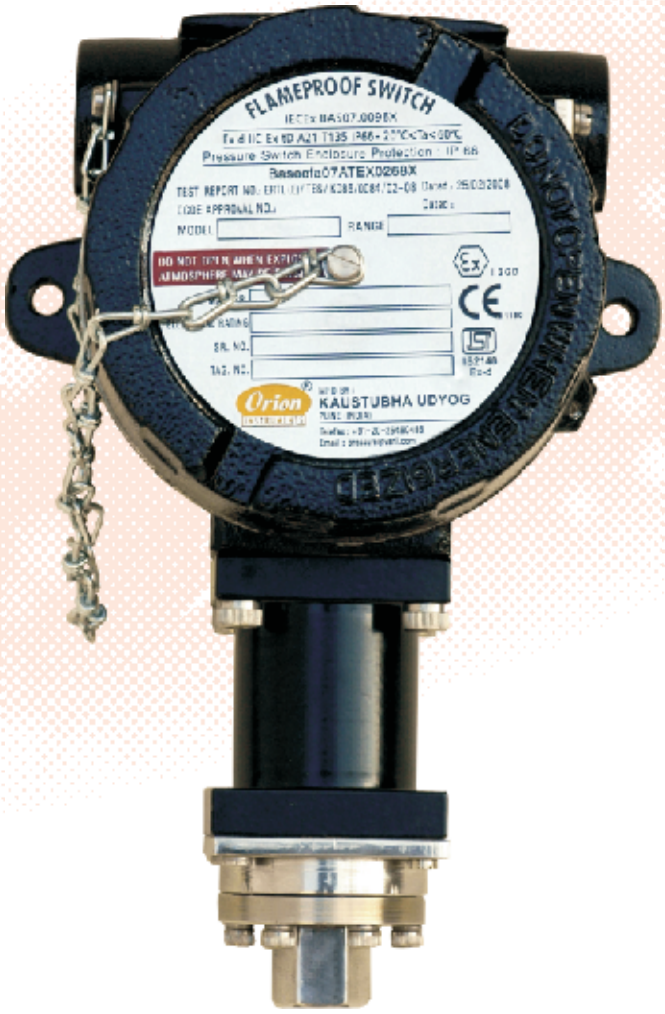

Baseefa APPROVED

Ex

CE

with IECEx CoC

CCOE approved

KLPL approved

FC Sıcaklık *Serisi*

Using the section

This section helps you make a logical choice in selecting the best product for a particular application. It allows a user familiar with our product line to locate the exact page the product is listed on. For those not familiar with our products, a logical sequence is given to help the user pick the best product for their need.

By taking a few minutes to familiarise yourself with the catalogue organisation, you will find it very easy to locate the product / information you need.

1. The contents page lists the broad outline in which the catalogue is organised, and will help the user familiar with products to select the page on which the product or other useful information is listed.
2. Need Product Selection help ?

   Product selection help will start with the “Pictorial Index” on Page 11, where the products are broadly classified. A brief description of each product group , a typical photo of the product within the group and the page number on which it is listed are given.

   If the user is not familiar with the products, a product selection guide is provided on pages 16 through 20, where photos for each product and important specifications are given to help determine and select the best product for the application.

   By evaluating and comparing these parameters, a logical selection can be made. Turn to the page on which the product information for the selected product is listed, for :

   Capsule Construction details

   Physical sizes

   Special features

   Ranges, hysterisis, electrical ratings etc.

   Ordering information

   Some applications

   The organisation of each of these pages is demonstrated on pages 12 & 13, of the section “How to use this section”.

   In many cases, more than one product may work. For the most cost effective solution, compare prices and consider alternatives. Remember, the end cost includes initial product price, plus the installation, plus the service.

3. Need the terminology explained? (see page 330)

   Turn to page 330 for the definitions and terminology. This will help you familiarise with the terms used throughout the catalogue.

4. Need information on Accessories? (see page 322)

   Turn to page 322 for information on important accessories. These will give information on only important accessories, and information needed, when these are to be supplied with our products.

5. Need selection guidance? (see page 331)

   A logical procedure on page 331 will help you to consider most of the important factors when selecting a pressure switch.

6. Need other products ? (see page 332)

   Products other than those listed in this catalogue are referenced on these pages. Separate catalogues for these products are available.

International Certifications

with IECEx CoC

Baseefa

APPROVED

IECEx Certificate of Conformity

INTERNATIONAL ELECTROTECHNICAL COMMISSION
IEC Certification Scheme for Explosive Atmospheres
for rules and details of the IECEx Scheme visit www.iecex.com

Certificate No.: IECEx BAS 07.0066X Issue No.:1
Certificate history: Issue No. 1 (2010-12-6) Issue No. 0 (2008-3-5)
Status: Current
Date of Issue: 2010-12-06 Page 1 of 4

Applicant: Kaustubha Udyog
7, Parichaya Society
1000/6D
Navi Peth
Pune 411 030
India

Electrical Apparatus: Flameproof Pressure Switch
Optional accessory:

Type of Protection: Ex d, Ex tD

Marking: Ex d IIC Gb Ex tb IIIC Db T85°C (-20°C ≤ Ta ≤ +60°C) IP66

Approved for issue on behalf of the IECEx Certification Body: R S Sinclair
Position: Managing Director
Signature: (for printed version)
Date: 6/12/10

1. This certificate and schedule may only be reproduced in full.
2. This certificate is not transferable and remains the property of the issuing body.
3. The Status and authenticity of this certificate may be verified by visiting the Official IECEx Website.

Certificate issued by:
Baseefa
Rockhead Business Park
Staden Lane
Buxton
Derbyshire
SK17 9RZ
United Kingdom

Baseefa

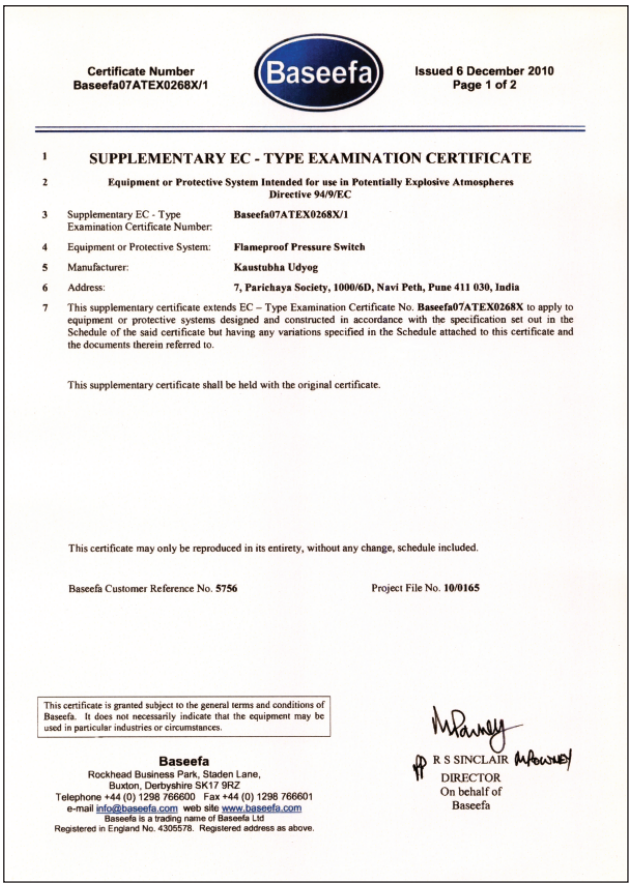

Certificate Number Baseefa07ATEX0268X/1

Baseefa

Issued 6 December 2010
Page 1 of 2

1 SUPPLEMENTARY EC - TYPE EXAMINATION CERTIFICATE

2 Equipment or Protective System Intended for use in Potentially Explosive Atmospheres Directive 94/9/EC

3 Supplementary EC - Type Examination Certificate Number: Baseefa07ATEX0268X/1

4 Equipment or Protective System: Flameproof Pressure Switch

5 Manufacturer: Kaustubha Udyog

6 Address: 7, Parichaya Society, 1000/6D, Navi Peth, Pune 411 030, India

7 This supplementary certificate extends EC – Type Examination Certificate No. Baseefa07ATEX0268X to apply to equipment or protective systems designed and constructed in accordance with the specification set out in the Schedule of the said certificate but having any variations specified in the Schedule attached to this certificate and the documents therein referred to.

This supplementary certificate shall be held with the original certificate.

This certificate may only be reproduced in its entirety, without any change, schedule included.

Baseefa Customer Reference No. 5756 Project File No. 10/0165

This certificate is granted subject to the general terms and conditions of Baseefa. It does not necessarily indicate that the equipment may be used in particular industries or circumstances.

Baseefa
Rockhead Business Park, Staden Lane,
Buxton, Derbyshire SK17 9RZ
Telephone +44 (0) 1298 766600 Fax +44 (0) 1298 766601
e-mail info@baseefa.com web site www.baseefa.com
Baseefa is a trading name of Baseefa Ltd
Registered in England No. 4305578. Registered address as above.

R S SINCLAIR
DIRECTOR
On behalf of
Baseefa

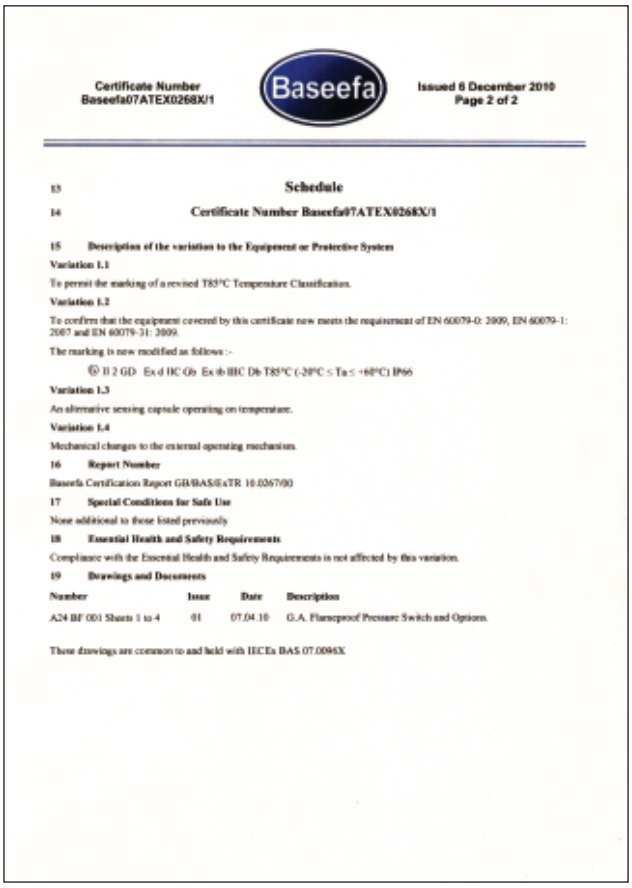

Certificate Number Baseefa07ATEX0268X/1

Baseefa

Issued 6 December 2010
Page 2 of 2

15 Schedule

14 Certificate Number Baseefa07ATEX0268X/1

15 Description of the variation to the Equipment or Protective System

Variation 1.1
To permit the marking of a revised T85°C Temperature Classification.

Variation 1.2
To confirm that the equipment covered by this certificate now meets the requirement of EN 60079-0: 2009, EN 60079-1: 2007 and EN 60079-31: 2009.

The marking is now modified as follows :-

⟨Ex⟩ II 2 GD Ex d IIC Gb Ex tb IIIC Db T85°C (-20°C ≤ Ta ≤ +60°C) IP66

Variation 1.3
An alternative sensing capsule operating on temperature.

Variation 1.4
Mechanical changes to the external operating mechanism.

16 Report Number
Baseefa Certification Report GB/BAS/ExTR 10.0267/00

17 Special Conditions for Safe Use
None additional to those listed previously

18 Essential Health and Safety Requirements
Compliance with the Essential Health and Safety Requirements is not affected by this variation.

19 Drawings and Documents

Number	Issue	Date	Description
A24 BF 001 Sheets 1 to 4	01	07.04.10	G.A. Flameproof Pressure Switch and Options.

These drawings are common to and held with IECEx BAS 07.0066X

Indian Certifications

KLPL Test Certificate

Karandikar Laboratories

TYPE EXAMINATION REPORT
Electrical Apparatus for Explosive Atmospheres

03 TE Report Number: KLPL/Ex/R/10-006X Dated. 29th December 2010

04 Electrical Apparatus: Flameproof Pressure / Temperature Switch (ORION Brand – Model PC / PA / PM)

05 Manufacturer: Kaustubha Udyog,
06 Address: 7, Parkshaya Society, 1808/60, Navi Peth, Pune 411 030, India.

07 This equipment and any acceptable variation thereto are specified in the schedule to this TE Report and the documents therein referred to.

08 Karandikar Laboratories Pvt. Ltd. certifies that this equipment has been found to comply with requirements of the following standards relating to the design and construction of electrical apparatus for explosive gas atmospheres.

The equipment was taken up for recertification based on the compliance already established by ERTL(E) for compliance to IS 13346: 2004 & IS 2148:2004, vide their test report no. ERTL (E) / TES / K065 / 0084 / 02-08 dated 25-02-2008 for gas groups I, IIA, IIB, IIC.

This TE Report was issued as verification that a sample, representative of production, was assessed and tested and found to comply with the IS / IEC standards listed below.

IS/IEC 60079-0: 2004 IS/IEC 60079-1: 2007 IS/IEC 60529:2001

09 The Evaluation and Test results are recorded in KLPL's confidential report No. KLPL / Ex / R / K0-18/081 Dated 29th December 2010.

10 The sign 'X' if placed after the TE Report number, indicates that the equipment is subject to special conditions of safe use specified in the schedule to this TE Report.

11 This TE Report does not indicate compliance with electrical safety and performance requirements other than those expressly included in the above listed standards.

12 The marking of the Equipment shall include the following:

Exd I IIC T6 IP66 Gb Ta (-20°C to +60°C)

Page 1 of 4

R.K. Parappa - Director

This certificate may only be reproduced in its entirety, without any change, schedule included and is subject to Karandikar Laboratories general terms & conditions

Karandikar Laboratories Pvt. Ltd.

In association with Baseefa

helping to make the world safer

CCOE Certificate

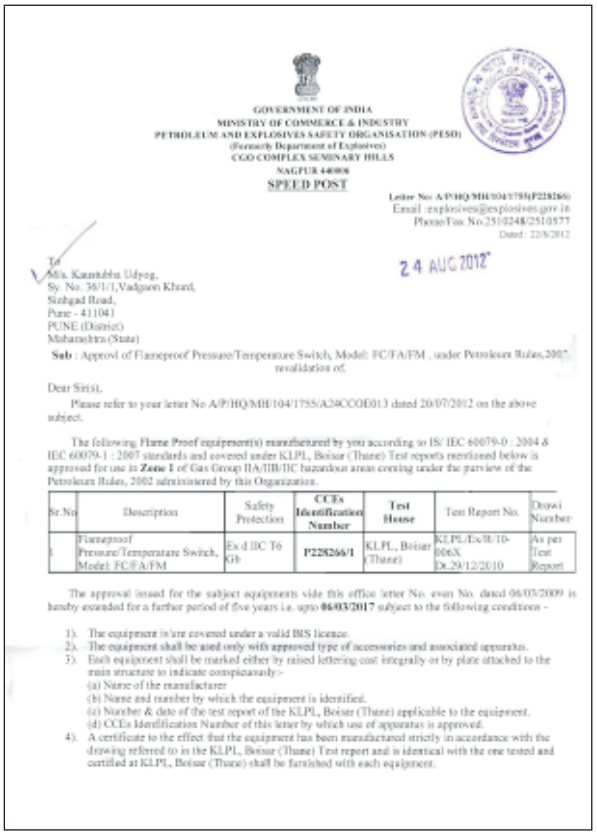

GOVERNMENT OF INDIA
MINISTRY OF COMMERCE & INDUSTRY
PETROLEUM AND EXPLOSIVES SAFETY ORGANISATION (PESO)
(Formerly Department of Explosives)
CGO COMPLEX SEMINARY HILLS
NAGPUR 440006

SPEED POST

Letter No: A/P/HQ/MH/104/1755(P228266)
Email: explosives@explosives.gov.in
Phone/Fax No.2510248/2510577
Dated : 22/8/2012

24 AUG 2012

To
M/s. Kaustubha Udyog,
Sy. No. 36/1/1,Vadgaon Khurd,
Sinhgad Road,
Pune - 411041
PUNE (District)
Maharashtra (State)

Sub : Approval of Flameproof Pressure/Temperature Switch, Model: FC/FA/FM , under Petroleum Rules,2002 revalidation of.

Dear Sir(s),

Please refer to your letter No A/P/HQ/MH/104/1755/A24CCOE013 dated 20/07/2012 on the above subject.

The following Flame Proof equipment(s) manufactured by you according to IS/ IEC 60079-0 : 2004 & IEC 60079-1 : 2007 standards and covered under KLPL, Boisar (Thane) Test reports mentioned below is approved for use in **Zone 1** of Gas Group IIA/IIB/IIC hazardous areas coming under the purview of the Petroleum Rules, 2002 administered by this Organization.

Sr.No	Description	Safety Protection	CCEs Identification Number	Test House	Test Report No.	Drawi Number
1	Flameproof Pressure/Temperature Switch, Model: FC/FA/FM	Ex d IIC T6 Gb	P228266/1	KLPL, Boisar (Thane)	KLPL/Ex/R/10-006X Dt.29/12/2010	As per Test Report

The approval issued for the subject equipments vide this office letter No. even No. dated 06/03/2009 is hereby extended for a further period of five years i.e. upto **06/03/2017** subject to the following conditions -

1). The equipment is/are covered under a valid BIS licence.
2). The equipment shall be used only with approved type of accessories and associated apparatus.
3). Each equipment shall be marked either by raised lettering cast integrally or by plate attached to the main structure to indicate conspicuously :-
(a) Name of the manufacturer
(b) Name and number by which the equipment is identified.
(c) Number & date of the test report of the KLPL, Boisar (Thane) applicable to the equipment.
(d) CCEx Identification Number of this letter by which use of apparatus is approved.
4). A certificate to the effect that the equipment has been manufactured strictly in accordance with the drawing referred to in the KLPL, Boisar (Thane) Test report and is identical with the one tested and certified at KLPL, Boisar (Thane) shall be furnished with each equipment.

BIS License

भारतीय मानक ब्यूरो
BUREAU OF INDIAN STANDARDS

Address : Plot No. 637 to 640,MAIDC Building, Market Yard, Gultekdi, Pune 411037
Phones : 020-24274810,4,5,6,7
Fax : 020-24268859
E-mail : pune@bis.org.in
Web : http://www.bis.org.in

Pune Branch Office

ATTACHMENT TO LICENCE NO. CM/L- 7775906

CML NO	NAME OF THE LICENSEE WITH ADDRESS	PRODUCT	IS NO
7775906	KAUSTUBHA UDYOG SHED NO: 1 SINHAGAD ROAD VADGAON KD Pune Maharashtra 411041	Electrical equipment for use in explosive atmospheres : Part 1 – Equipment protection by flameproof enclosures 'd'	IS/IEC 60079-1:2007

ENDORSEMENT NO. 7 Dated 02 JULY 2012

Consequent upon implementation of revised IS/IEC 60079-1:2007 Column (2) of the First Schedule and Column (1) of the Second Schedule of the Licence have been modified as under with effect from Eighteenth June Two Thousand and Twelve.

As per Annexure

Other terms and conditions of Licence remain the same.

(B.M. HANEEF)
SCIENTIST-'F' & HEAD

Pictorial Index

PRESSURE SWITCHES

HIGH RANGE

Page No. 22

HIGH PROOF HIGH RANGE

Page No. 26

BELLOWS

Page No. 30

LOW RANGE

Page No. 34

HYDRAULIC RANGE*

Page No. 38

FLANGED

Page No. 42

PRESSURE DIFFERENCE SWITCHES

HIGH RANGE

Page No. 46

HIGH PROOF HIGH RANGE

Page No. 50

HIGH RANGE DP

Page No. 54

LOW RANGE

Page No. 58

LOW ΔP HIGH PROOF

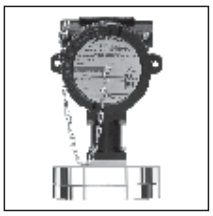

Page No. 62

VACUUM SWITCHES

Page No. 66

COMPOUND SWITCHES

Page No. 70

TEMPERATURE SWITCHES

Page No. 74

*Hydraulic ranges are ranges typically from 2 bar to 400 bar, used in oil applications.
However, these switches can be used for other media depending on wetted parts compatibility.

HOW TO USE this section

Due to the variety in product types and their salient features, catalogue page formats may vary. But generally the following format is adhered to.

Elements appearing on each page will be:

1. Product family / series - A product family / series will appear on the outside page corner, depending on the left / right hand page, and will be in large bold type.

2. Product section - will appear immediately following the product family / series at top of the page and will be in bold type.

3. Features - will appear next to product description & will enlist only the major attributes.

4. Pressure capsule details - will show the construction of the pressure capsule and all it's internal parts. If the process / working medium is variable, the wetted parts will be mentioned in italics. If the wetted parts are unique, the material of construction (MOC) will be mentioned alongside in brackets. Where the material of construction is not specified, it will vary and the options are to be selected by the user considering the compatibility of the process / working medium. Modifications can be made to suit any particular medium, if the answer for your needs is not in the standard MOC listed. Products for which process / working medium is predefined, pressure capsule details are not provided (e.g as in case of comparison test pump). Pressure capsule details of accessories are not given.

5. Installation drawing - will show the typical installation dimensions of products as they exist in their standard forms. The dimensions are mentioned in millimetres and also in inches to facilitate the user. The dimensions of accessories will have to be added to these to arrive at any particular general arrangement (GA) drawings. The

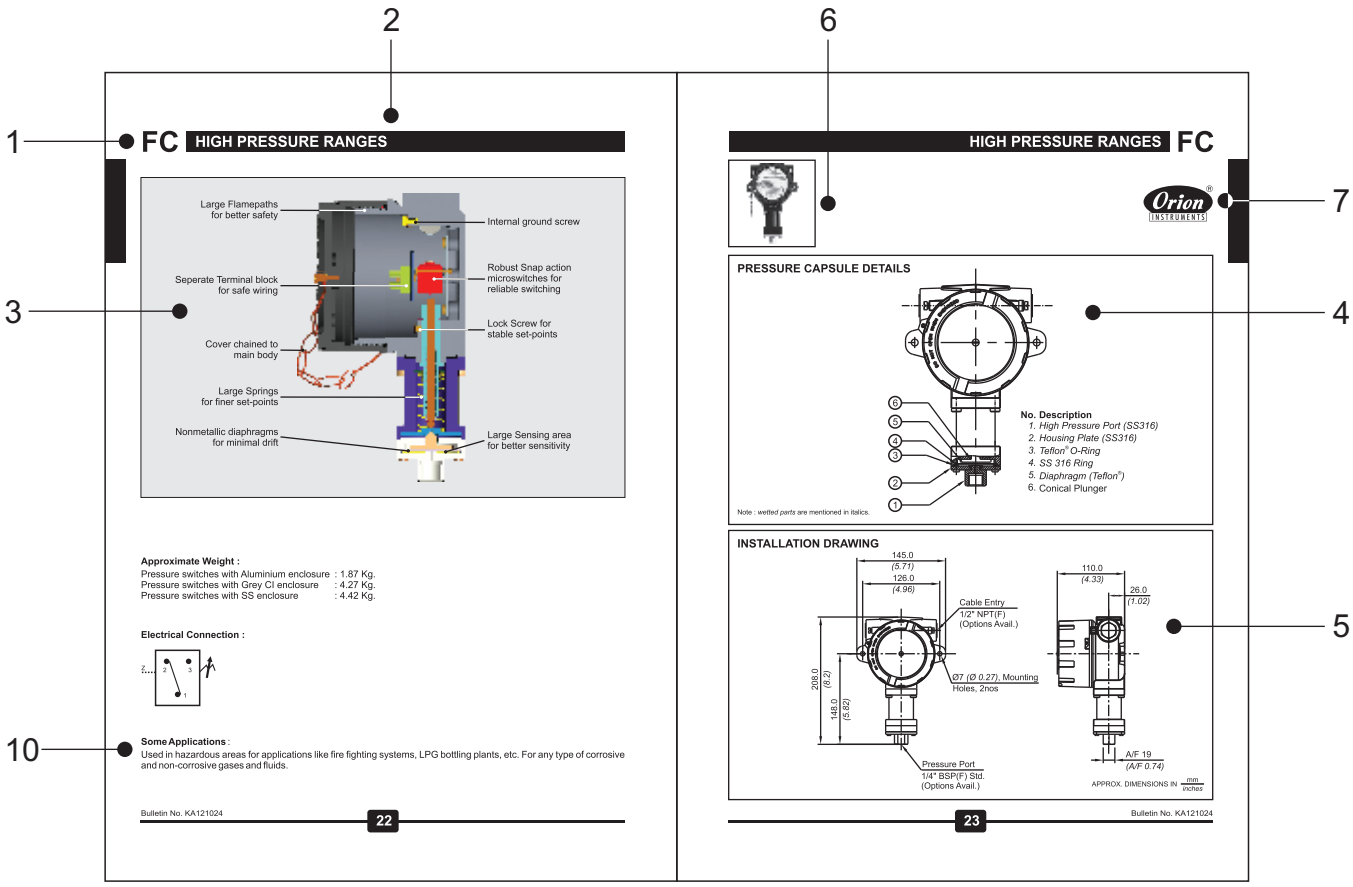

dimensions are approximate and for precise dimensions, where mounting space is restricted, the user may contact the nearest sales office. Installation drawings of only fast moving accessories are given.

6. Photos - will appear on the relevant top of the page for products. If there are mounting variations / styles, all the styles for standard products will appear for easy identification. Options, if included in the photograph, are for demonstration only, and are not a part of the standard equipment. For accessories, the photos are not given due to the sheer variety and range available.

7. Logo - will appear on right hand top of page to identify the manufacturer.

8. Characteristics - Range tables and their relevant data, e.g the range covered, the differentials and maximum working pressures will generally appear on the right hand page. Additional technical details will also be mentioned, wherever required, on the right hand side of the page.

9. Ordering guide - A guide as to how to order the particular series' variations will appear on right hand bottom of the page. Only the variations available within a particular product family / series will appear here. Any additional accessories or modifications required for the product need to be mentioned in text by the user.

10. Some applications - will appear at the bottom left of the page. This is for easy understanding of the specific use of the switch.

11. Numerous combinations are possible when pressure switches are provided with accessories like chemical seals, snubbers, remote seals, pipe mounting brackets, combination of switches mounted in a panel etc. Users are requested to provide the details of accessories required in text / drawings, as separate identification codes are provided for pressure switches fitted and supplied with accessories.

8

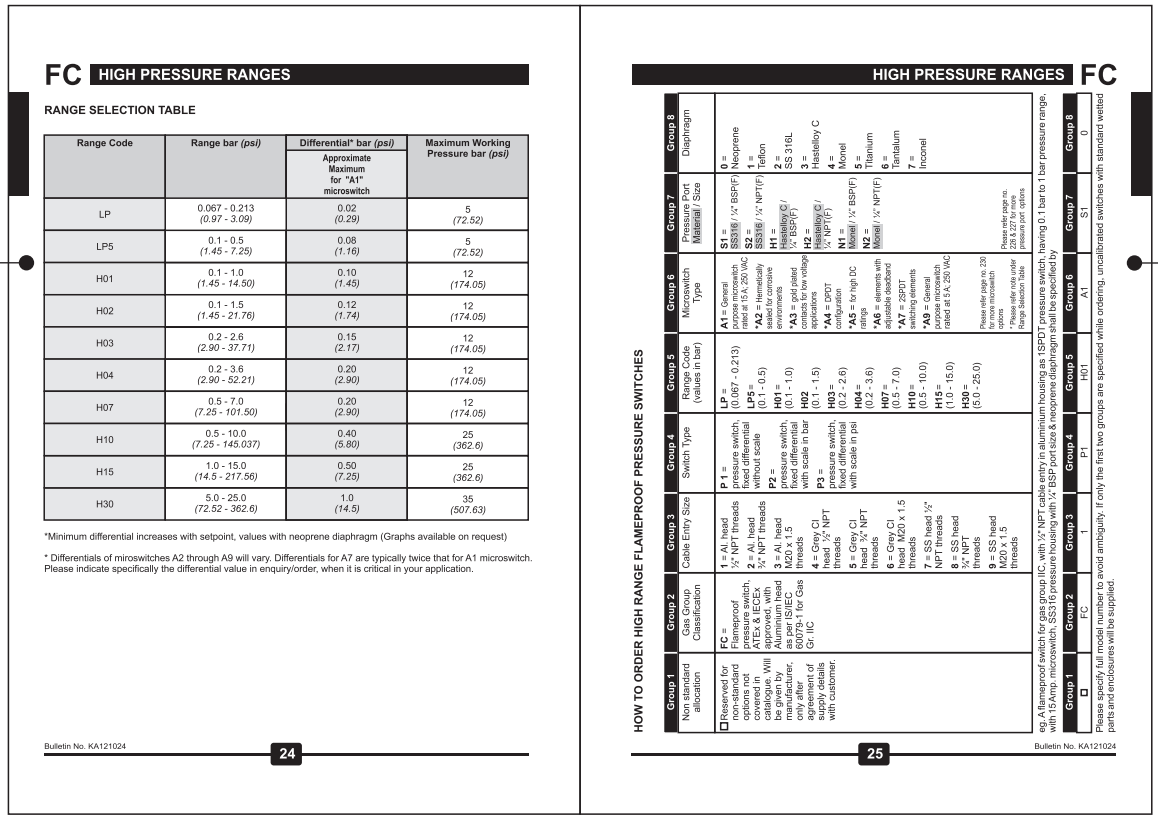

FC HIGH PRESSURE RANGES

RANGE SELECTION TABLE

Range Code	Range bar *(psi)*	Differential* bar *(psi)*	Maximum Working Pressure bar *(psi)*
		Approximate Maximum for "A1" microswitch	
LP	0.067 - 0.213 *(0.97 - 3.09)*	0.02 *(0.29)*	5 *(72.52)*
LP5	0.1 - 0.5 *(1.45 - 7.25)*	0.08 *(1.16)*	5 *(72.52)*
H01	0.1 - 1.0 *(1.45 - 14.50)*	0.10 *(1.45)*	12 *(174.05)*
H02	0.1 - 1.5 *(1.45 - 21.76)*	0.12 *(1.74)*	12 *(174.05)*
H03	0.2 - 2.6 *(2.90 - 37.71)*	0.15 *(2.17)*	12 *(174.05)*
H04	0.2 - 3.6 *(2.90 - 52.21)*	0.20 *(2.90)*	12 *(174.05)*
H07	0.5 - 7.0 *(7.25 - 101.50)*	0.20 *(2.90)*	12 *(174.05)*
H10	0.5 - 10.0 *(7.25 - 145.037)*	0.40 *(5.80)*	25 *(362.6)*
H15	1.0 - 15.0 *(14.5 - 217.56)*	0.50 *(7.25)*	25 *(362.6)*
H30	5.0 - 25.0 *(72.52 - 362.6)*	1.0 *(14.5)*	35 *(507.63)*

*Minimum differential increases with setpoint, values with neoprene diaphragm (Graphs available on request)

* Differentials of miroswitches A2 through A9 will vary. Differentials for A7 are typically twice that for A1 microswitch. Please indicate specifically the differential value in enquiry/order, when it is critical in your application.

Bulletin No. KA121024

24

HIGH PRESSURE RANGES **FC**

HOW TO ORDER HIGH RANGE FLAMEPROOF PRESSURE SWITCHES

Group 1	Group 2	Group 3	Group 4	Group 5	Group 6	Group 7	Group 8
Non standard allocation	Gas Group Classification	Cable Entry Size	Switch Type	Range Code (values in bar)	Microswitch Type	Pressure Port Material / Size	Diaphragm
☐ Reserved for non-standard options not covered in catalogue. Will be given by manufacturer, only after agreement of supply details with customer.	**FC** = Flameproof pressure switch, ATEX & IECEx approved, with Aluminium head as per IS/IEC 60079-1 for Gas Gr. IIC	**1** = Al. head ½" NPT threads **2** = Al. head ¾" NPT threads **3** = Al. head M20 x 1.5 threads **4** = Grey CI head ½" NPT threads **5** = Grey CI head ¾" NPT threads **6** = Grey CI head M20 x 1.5 threads **7** = SS head ½" NPT threads **8** = SS head ¾" NPT threads **9** = SS head M20 x 1.5 threads	**P 1** = pressure switch, fixed differential without scale **P2** = pressure switch, fixed differential with scale in bar **P3** = pressure switch, fixed differential with scale in psi	**LP** = (0.067 - 0.213) **LP5** = (0.1 - 0.5) **H01** = (0.1 - 1.0) **H02** = (0.1 - 1.5) **H03** = (0.2 - 2.6) **H04** = (0.2 - 3.6) **H07** = (0.5 - 7.0) **H10** = (0.5 - 10.0) **H15** = (1.0 - 15.0) **H30** = (5.0 - 25.0)	**A1** = General purpose microswitch rated at 15 A, 250 VAC **A2** = Hermetically sealed for corrosive environments ***A3** = gold plated contacts for low voltage applications ***A4** = DPDT configuration ***A5** = for high DC ratings ***A6** = elements with adjustable deadband ***A7** = 2SPDT switching elements ***A9** = General purpose microswitch rated at 5 A, 250 VAC Please refer page no. 238 for more information on microswitch options * Please refer note under Range selection table.	**S1** = SS316 / ¼" BSP(F) **S2** = SS316 / ¼" NPT(F) **H1** = Hastelloy C / ¼" BSP(F) **H2** = Hastelloy C / ¼" NPT(F) **N1** = Monel / ¼" BSP(F) **N2** = Monel / ¼" NPT(F) **T** = Tantalum **7** = Inconel Please refer page no. 235 & 237 for more pressure port options	**0** = Neoprene **1** = Teflon **2** = SS 316L **3** = Hastelloy C **4** = Monel **5** = Titanium **6** = Tantalum **7** = Inconel
Group 1	**Group 2**	**Group 3**	**Group 4**	**Group 5**	**Group 6**	**Group 7**	**Group 8**
☐	FC	1	P1	H01	A1	S1	0

Please specify full model number to avoid ambiguity. If only the first two groups are specified while ordering, uncalibrated switches with standard wetted parts and enclosures will be supplied.

eg. A flameproof switch for gas group IIC, with ½" NPT cable entry in aluminium housing as 1SPDT pressure switch, having 0.1 bar to 1 bar pressure range, with 15 Amp. microswitch, SS316 pressure housing with ¼" BSP port size & neoprene diaphragm shall be specified by

Bulletin No. KA121024

25

9

Switch Construction

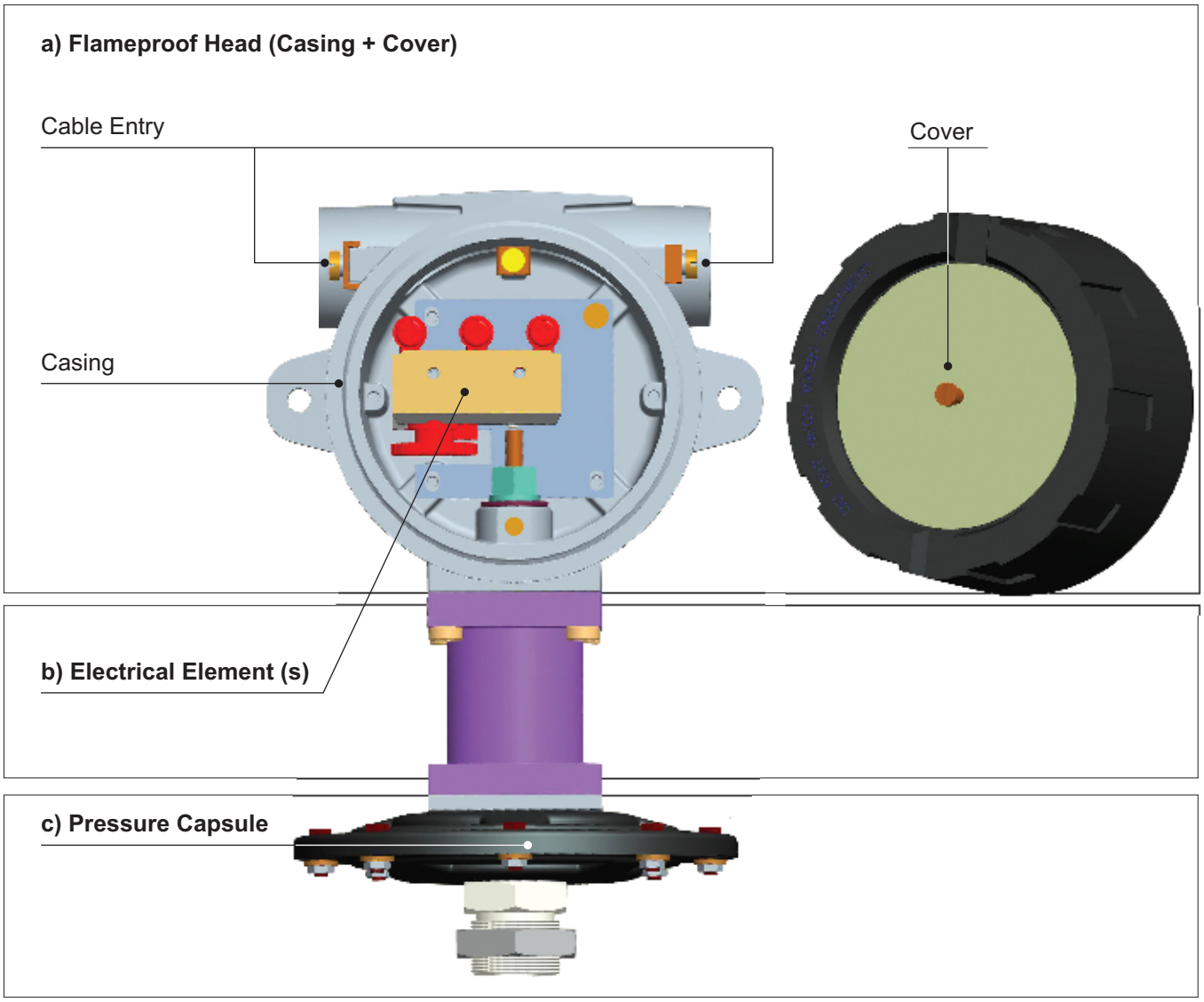

Switch Construction

The versatile construction of FC series flameproof switches can be configured to suit applications, by selecting the following main subassemblies / components :

a) The flameproof head

FC 1, 2, 3 : Aluminium flameproof enclosure for Gas group IIA, IIB, IIC

FC 4, 5, 6 : Grey Cast Iron enclosure for Gas group I for mines

FC 7, 8, 9 : Stainless Steel enclosure for highly corrosive atmospheres (Gas group IIC).

The cable entries in these flameproof heads can be offered in one of the following thread sizes, to suit appropriate cable diameter :

- ½ " NPT F
- ¾" NPT F
- M20 X 1.5

b) The electrical element (s) :

Choice of electrical elements to suit end use are offered, like :

A1 : General purpose applications

A2 : Hermetically sealed for corrosive environments

A3 : gold plated contacts for low voltage applications

A4 : DPDT configuration

A5 : for high DC ratings

A6 : elements with adjustable deadband

A7 : 2 SPDT switching elements

It is possible to have more options of electrical elements not published here, to suit individual end use.

The deadband (or hysterisis / on-off differential) of the switches will change with the change of the electrical element (s). The approximate values for each range (for standard microswitches offered) are published in this catalogue

c) The pressure capsule :

To suit the setpoints , the working media and the function of the switch in the application:

High pressure ranges
(typically from 0.067 barg to 25 barg)

Low pressure ranges
(typically from 1.5 mbarg to 350 mbarg)

High range Pressure difference
(typically from 0.1 barg to 25 barg)

Low range pressure difference
(typically from 1.5 mbarg to 350 mbarg)

Vacuum
(typically from 760 mm Hg to atmospheric pressure)

Hydraulic pressure ranges
(typically from 0.5 barg to 400 barg)

The pressure capsule can be modified to take high proof pressures [typically 100 bar for high and low pressure switches, or pressure difference switches (from high pressure side)].

Several accessories like chemical seals, pipe mounting brackets etc can be supplied with these switches to suit the media to be sensed. All of these are not listed, though most popular ones can be found on pages 322 through 332.

Please do get in touch with us for any of your applications, not addressed in this catalogue. We would be glad to offer you a solution.

Product Selection Guide

High Range Pressure Switches
High Proof High Range Pressure Switches
High Range Bellows Pressure Switches

Page No. 22 Page No. 26 Page No. 30

Switch type	High range pressure	High proof high range	Bellows
Repeatability* (% FSR)	± 1	± 1	± 2
Range covered	0.067 bar to 25 bar	0.1 bar to 25 bar	0.1 bar to 100 bar
Enclosure Protection	IP 66		
Enclosure Material	FC 1, 2, 3 models (gas group IIC) : Diecast aluminium FC 4, 5, 6 models (gas group I) : Grey cast iron FC 7, 8, 9 models (gas group IIC) : Stainless Steel		
WETTED PARTS sensing element Standard Optional	Diaphragm nylon reinforced neoprene diaphragm Teflon, SS316L, Hastelloy C, Monel, Titanium, Tantalum, Inconel Teflon, SS316L		Bellows SS316L
Pressure housing Standard Optional	SS 316 Hastelloy C, Monel		
Other Wetted Parts			
Optional wetted parts through chem. seal	SS316, Hastelloy B2, Hastelloy C4, Hastelloy C22, Hastelloy C276, Inconel Alloy 600, Monel Alloy 400, Monel Alloy K500, Nickel, Platinum, Tantalum, Titanium, Zirconium, Silver, PTFE		
Temp. of working medium	For non-metallic diaphragm: 80°C maximum. For metallic diaphragm: 150°C maximum. For higher temperature, please use impulse tubing/chemical seals.		
Switching element	SPDT Snap action switch A1 : General purpose rated at 15A, 250 VAC, 0.2 A, 250 VDC resistive. Other microswitches with gold plated contacts, hermetically sealed etc. also available.		

Accessories can be supplied with most of the switches. Please consult sales office.
*Repeatability changes with switch configuration.

Low Range Pressure Switches
Hydraulic Pressure Switches
Flanged Pressure Switches

Page No. 34

Page No. 38

Page No. 42

Low range pressure	Hydraulic	Flanged
± 2	± 2	± 1
1.5 mbar to 350 mbar	0.5 bar to 400 bar	0.1 bar to 200 bar
IP 66		
FC 1, 2, 3 models (gas group IIC) : Diecast aluminium FC 4, 5, 6 models (gas group I) : Grey cast iron FC 7, 8, 9 models (gas group IIC) : Stainless Steel		
Diaphragm nylon reinforced neoprene diaphragm Teflon, SS316L	Diaphragm SS316L Teflon, Neoprene, Hastelloy C, Monel, Titanium, Tantalum, Inconel	Diaphragm SS316L Teflon, Neoprene, Hastelloy C, Monel, Titanium, Tantalum
SS 316		Flange SS316L Hastelloy C, Titanium, Monel, Tantalum
Al, Neoprene, SS, Nitrile	Viton / Teflon	Teflon
For non-metallic diaphragm: 80°C maximum. For metallic diaphragm: 150°C maximum. For higher temperature, please use impulse tubing/chemical seals.		
SPDT Snap action switch A1 : General purpose rated at 15A, 250 VAC, 0.2 A, 250 VDC resistive. Other microswitches with gold plated contacts, hermetically sealed etc. also available.		

Product Selection Guide

High Range Pressure Difference Switches
High Proof High Range Pressure Difference Switches
High Range DP Pressure Difference Switches

Page No. 46 | Page No. 50 | Page No. 54

Switch type	High range ? p	High proof high range ? p	High range DP
Repeatability* (% FSR)	± 1	± 1	± 1
Range covered	0.1 bar to 3.6 bar	0.1 bar to 3.6 bar	0.1 bar to 25 bar
Enclosure Protection	IP 66		
Enclosure Material	FC 1, 2, 3 models (gas group IIC) : Diecast aluminium FC 4, 5, 6 models (gas group I) : Grey cast iron FC 7, 8, 9 models (gas group IIC) : Stainless Steel		
WETTED PARTS sensing element Standard Optional	Diaphragm nylon reinforced neoprene diaphragm Teflon, SS316L	Teflon	Teflon, SS316L, Monel
Pressure housing Standard Optional	Aluminium SS 316	SS 316	Aluminium SS 316, Monel
Other Wetted Parts	Teflon, SS 316	Teflon, SS 316	Teflon, SS 316
Optional wetted parts through chem. seal			
Temp. of working medium	For non-metallic diaphragm: 80°C maximum. For metallic diaphragm: 150°C maximum. For higher temperature, please use impulse tubing/chemical seals.		
Switching element	SPDT Snap action switch A1 : General purpose rated at 15A, 250 VAC, 0.2 A, 250 VDC resistive. Other microswitches with gold plated contacts, hermetically sealed etc. also available.		

Accessories can be supplied with most of the switches. Please consult sales office.
*Repeatability changes with switch configuration.

Low Range Pressure Difference Switches
High Proof Low Range Pressure Difference Switches
Vacuum Switches

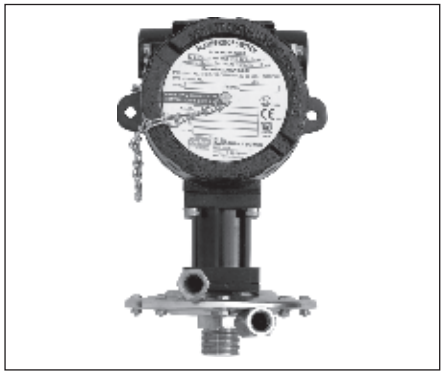

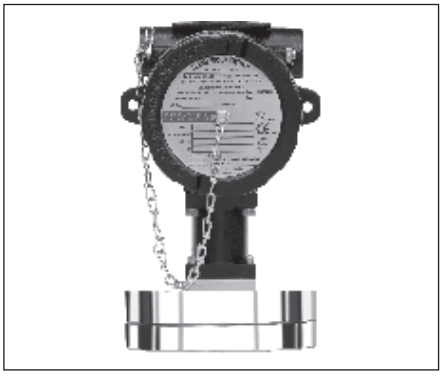

Page No. 58

Page No. 62

Page No. 66

Low range ?p	High proof low ?p	Vacuum
± 2	± 2	± 2
1.5 mbar to 350 mbar	5 mbar to 350 mbar	760 mmHg to 100 mmHg
IP 66		
FC 1, 2, 3 models (gas group IIC) : Diecast aluminium FC 4, 5, 6 models (gas group I) : Grey cast iron FC 7, 8, 9 models (gas group IIC) : Stainless Steel		
Diaphragm nylon reinforced neoprene diaphragm Teflon		
SS 316	SS 316	Aluminium SS 316
Al, Neoprene, SS, Nitrile, M.S.	Teflon / SS 316 / Neoprene	SS 316, Teflon
For non-metallic diaphragm: 80°C maximum. For metallic diaphragm: 150°C maximum. For higher temperature, please use impulse tubing/chemical seals.		
SPDT Snap action switch A1 : General purpose rated at 15A, 250 VAC, 0.2 A, 250 VDC resistive. Other microswitches with gold plated contacts, hermetically sealed etc. also available.		

Product Selection Guide

Compound Switches
Temperature Switches

Page No. 70

Page No. 74

Switch type	Compound	Temperature
Repeatability* (% FSR)	± 2	± 1
Range covered	-1 bar to 3.6 bar	25°C to 215°C
Enclosure Protection	IP 66	
Enclosure Material	FC 1, 2, 3 models (gas group IIC) : Diecast aluminium FC 4, 5, 6 models (gas group I) : Grey cast iron FC 7, 8, 9 models (gas group IIC) : Stainless Steel	
WETTED PARTS sensing element Standard Optional	Diaphragm nylon reinforced neoprene diaphragm teflon	Bulb/probe Brass
Pressure housing Standard Optional	SS 316	
Other Wetted Parts	SS, Teflon	
Optional wetted parts through chem. seal		
Temp. of working medium	For non-metallic diaphragm: 80°C maximum. For metallic diaphragm: 150°C maximum. For higher temperature, please use impulse tubing/chemical seals.	
Switching element	SPDT Snap action switch A1 : General purpose rated at 15A, 250 VAC, 0.2 A, 250 VDC resistive. Other microswitches with gold plated contacts, hermetically sealed etc. also available.	

Accessories can be supplied with most of the switches. Please consult sales office.
*Repeatability changes with switch configuration.

FC TEMPERATURE SWITCHES

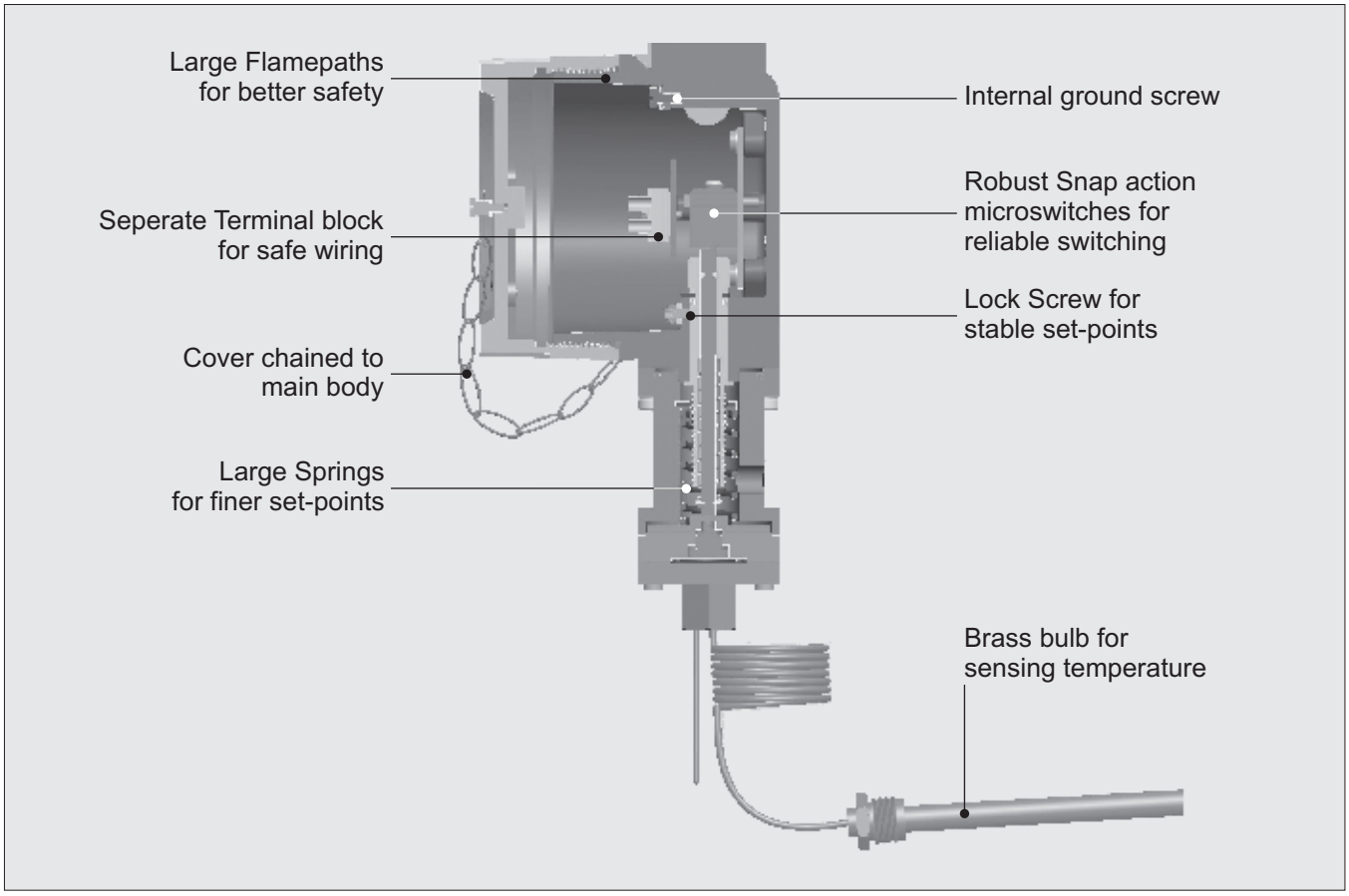

Approximate Weight :

Pressure switches with Aluminium enclosure : 2.5 Kg.
Pressure switches with SS enclosure : 5.1 Kg.

Electrical Connection :

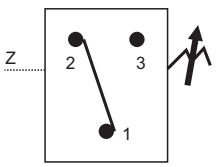

Some Applications :

To detect limiting temperature levels in hazardous areas.

INSTALLATION DRAWING

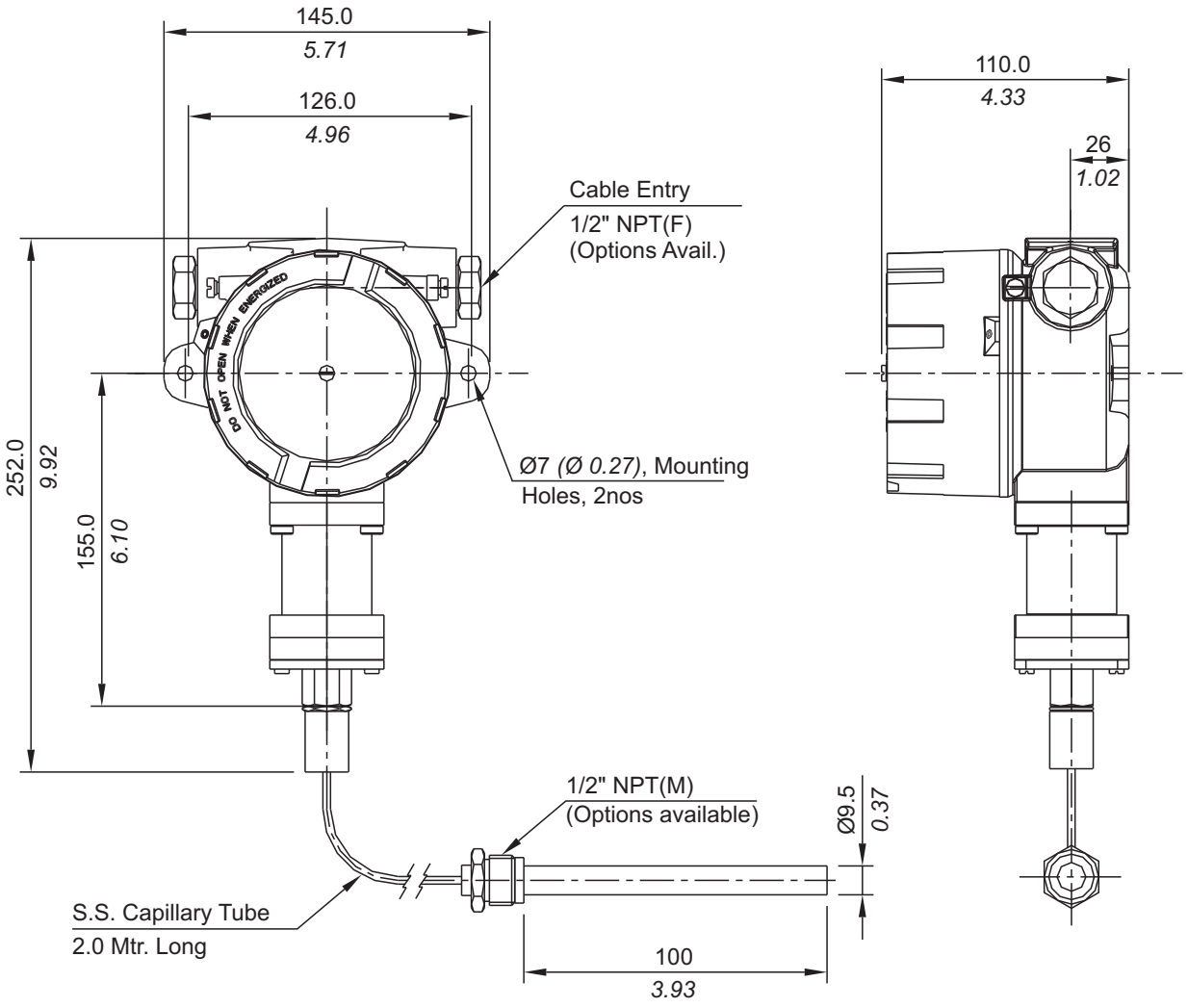

APPROX. DIMENSIONS IN mm / inches

RANGE SELECTION TABLE

Range Code	Range °C *(°F)*	Differential* °C *(°F)*	Maximum Working Temperature °C *(°F)*
		Approximate Maximum for "A1" microswitch	
T1H	25 - 90 *(77 - 194)*	15 *(59)*	150 *(302)*
T2H	70 - 150 *(158 - 302)*	20 *(68)*	200 *(392)*
T3H	120 - 215 *(248 - 419)*	30 *(86)*	300 *(572)*

* Approximate differential at midrange for A1 microswitch. Differentials increase with setpoint. Diffferentials vary with microswitch combinations. Please consult sales office for details

HOW TO ORDER FLAMEPROOF TEMPERATURE SWITCHES

Group 1	Group 2	Group 3	Group 4	Group 5	Group 6	Group 7	Group 8
Non standard allocation	Gas Group Classification	Cable Entry Size	Switch Type	Range Code (values in Deg. Cen.)	Microswitch Type	Temp. Bulb Material / Size	Capillary Material / Size
☐ Reserved for Non-standard Options not covered in Catalogue. Will Be given by Manufacturer, Only after Agreement of Supply details With customer.	**FC** = Flameproof temperature switch, ATEx & IECEx approved, with Aluminium head as per IS/IEC 60079-1 for Gas Gr. IIC	**1** = Al. head ½" NPT threads **2** = Al. head ¾" NPT threads **3** = Al. head M20 x 1.5 threads **7** = SS head ½" NPT threads **8** = SS head ¾" NPT threads **9** = SS head M20 x 1.5 threads	**T1** = Temperature Switch, fixed differential without scale **T2** = Temperature Switch, fixed differential with scale in °C	**T1H** = 25 - 90 **T2H** = 70 - 150 **T3H** = 120 - 215	**A1** = General purpose microswitch rated at 15 A; 250 VAC **A6** = Elements with adjustable differential **A7** = 2SPDT switching elements **B6** = Hermetically Sealed Gold Plated contact 2SPDT	**B1** = Brass / Dia. 9.5 mm, 123 mm length, with 3/8" BSP (M) thermowell connection **B2** = Brass / Dia. 9.5 mm, 123 mm length, with 3/8" NPT (M) thermowell connection **B3** = Brass / Dia. 9.5 mm, 123 mm length, with 1/2" NPT (M) thermowell connection	**2** = SS316 / 2.0 meter

E.g. A Flameproof Temperature switch, with 1/2"NPT cable entry in aluminum housing as 1 SPDT, fixed differential without scale, having 25°C to 90°C temperature range, with 15 Amp. microswitch, with Brass 9.5 mm diameter bulb, having length 123 mm with 3/8"BSP(M),with 2.0 meter SS316 capillary length shall be specified by

Group 1	Group 2	Group 3	Group 4	Group 5	Group 6	Group 7	Group 8
☐	FC	1	T1	T1H	A1	B1	2

Please specify full model number to avoid ambiguity.