PROCESS SWITCHES

SPECIFIER'S GUIDE FOR

- PRESSURE SWITCHES
- PRESSURE DIFFERENCE SWITCHES
- VACUUM SWITCHES
- TEMPERATURE SWITCHES

Orion® INSTRUMENTS

CE

MZ Sıcaklık *Serisi*

Bulletin No. KA121024

Using the section

This section helps you make a logical choice in selecting the best product for a particular application. It allows a user familiar with our product line to locate the exact page the product is listed on. For those not familiar with our products, a logical sequence is given to help the user pick the best product for their need.

By taking a few minutes to familiarise yourself with the catalogue organization, you will find it very easy to locate the product / information you need.

1. The contents page lists the broad outline in which the catalogue is organized, and will help the user familiar with products to select the page on which the product or other useful information is listed.
2. Need Product Selection help ?

   Product selection help will start with the "Pictorial Index" on Page 177, where the products are broadly classified. A brief description of each product group , a typical photo of the product within the group and the page number on which it is listed are given.

   If the user is not familiar with the products, a product selection guide is provided on pages 182 through 185, where photos for each product and important specifications are given to help determine and select the best product for the application.

   By evaluating and comparing these parameters, a logical selection can be made. Turn to the page on which the product information for the selected product is listed, for :

   Capsule Construction details

   Physical sizes

   Special features

   Ranges, hysterisis, electrical ratings etc.

   Ordering information

   Some applications

   The organisation of each of these pages is demonstrated on pages 178 and 179, of this section "How to use this catalogue".

   In many cases, more than one product may work. For the most cost effective solution, compare prices and consider alternatives. Remember, the end cost includes initial product price, plus the installation, plus the service.
3. Need the terminology explained? (see page 330)

   Turn to page 330 for the definitions and terminology. This will help you familiarize with the terms used throughout the catalogue.
4. Need information on Accessories? (see page 322)

   Turn to page 322 for information on important accessories. These will give information on only important accessories, and information needed, when these are to be supplied with our products.
5. Need selection guidance? (see page 331)

   A logical procedure on page 331 will help you to consider most of the important factors when selecting a pressure switch.
6. Need other products ? (see page 332)

   Products other than those listed in this catalogue are referenced on these pages. Separate catalogues for these products are available.

Pictorial Index

PRESSURE SWITCHES

HIGH RANGE

HIGH RANGE

Page No. 186

HIGH PROOF HIGH RANGE

Page No. 190

LARGE BORE HIGH RANGE

Page No. 194

FLANGED

Page No. 198

HYDRAULIC RANGE*

HYDRAULIC RANGE

Page No. 202

HYDRAULIC DIAPHRAGM RANGE

Page No. 206

PRESSURE DIFFERENCE SWITCHES

HIGH RANGE

Page No. 210

HIGH RANGE DP

Page No. 214

VACUUM SWITCHES

HIGH RANGE

Page No. 218

TEMPERATURE SWITCHES

Page No. 222

*Hydraulic ranges are ranges typically from 2 bar to 600 bar, used in oil applications.
However, these switches can be used for other media depending on wetted parts compatibility.

HOW TO USE this section

Due to the variety in product types and their salient features, catalogue page formats may vary. But generally the following format is adhered to.

Elements appearing on each page will be:

1. Product family / series - A product family / series will appear on the outside page corner, depending on the left / right hand page, and will be in large bold type.

2. Product section - will appear immediately following the product family / series at top of the page and will be in bold type.

3. Features - will appear next to product description & will enlist only the major attributes.

4. Pressure capsule details - will show the construction of the pressure capsule and all it's internal parts. If the process / working medium is variable, the wetted parts will be mentioned in italics. If the wetted parts are unique, the material of construction (MOC) will be mentioned alongside in brackets. Where the material of construction is not specified, it will vary and the options are to be selected by the user considering the compatibility of the process / working medium. Modifications can be made to suit any particular medium, if the answer for your needs is not in the standard MOC listed. Products for which process / working medium is predefined, pressure capsule details are not provided (e.g as in case of comparison test pump). Pressure capsule details of accessories are not given.

5. Installation drawing - will show the typical installation dimensions of products as they exist in their standard forms. The dimensions are mentioned in millimetres and also in inches to facilitate the user. The dimensions of accessories will have to be added to these to arrive at any particular general arrangement (GA) drawings. The dimensions are approximate and for precise dimensions, where mounting space is restricted, the user may contact the nearest sales office. Installation drawings of only fast moving accessories are given.

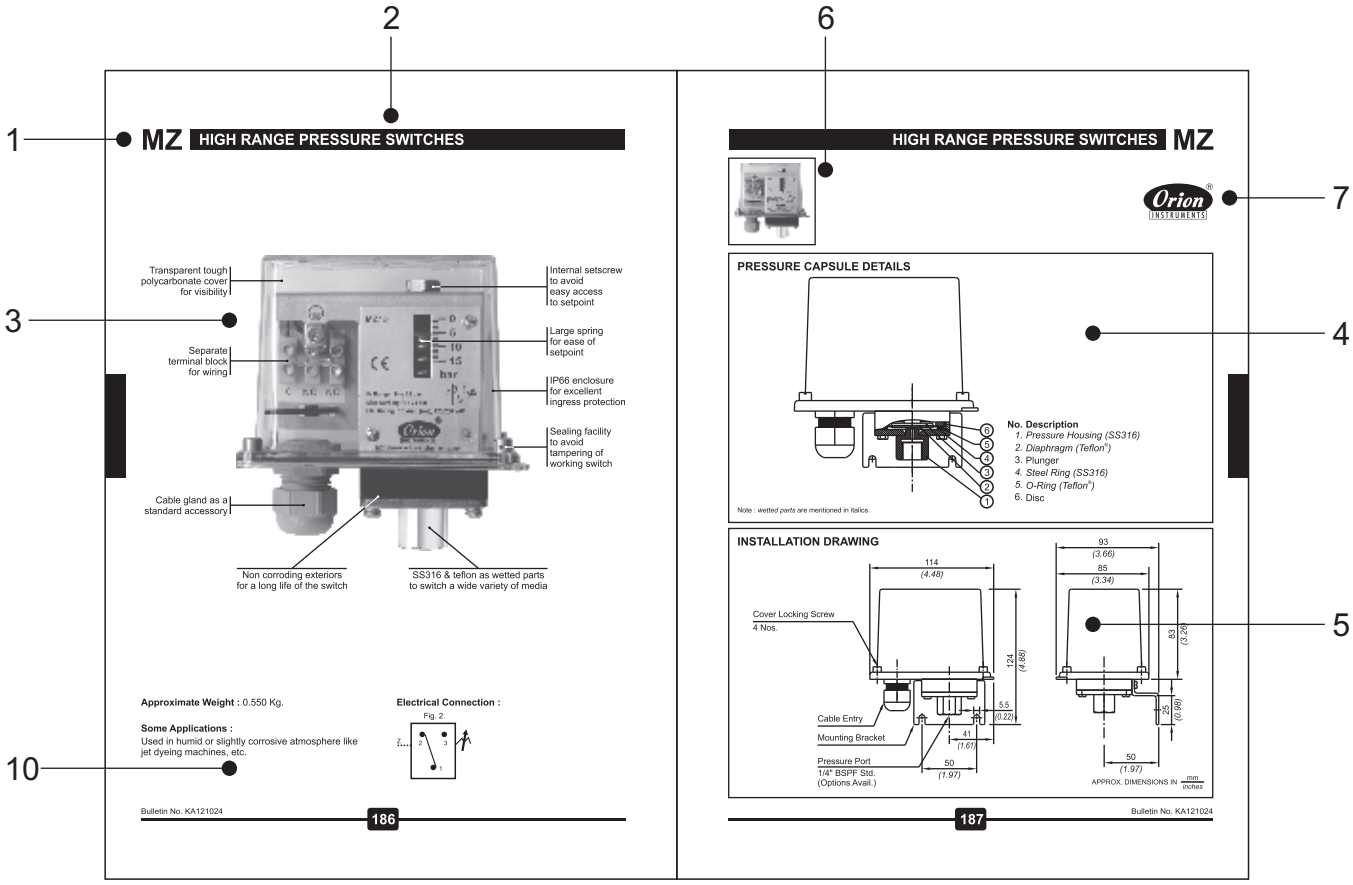

6. Photos - will appear on the relevant top of the page for products. If there are mounting variations / styles, all the styles for standard products will appear for easy identification. Options, if included in the photograph, are for demonstration only, and are not a part of the standard equipment. For accessories, the photos are not given due to the sheer variety and range available.

7. Logo - will appear on right hand top of page to identify the manufacturer.

8. Characteristics - Range tables and their relevant data, e.g the range covered, the differentials and maximum working pressures will generally appear on the right hand page. Additional technical details will also be mentioned, wherever required, on the right hand side of the page.

9. Ordering guide - A guide as to how to order the particular series' variations will appear on right hand bottom of the page. Only the variations available within a particular product family / series will appear here. Any additional accessories or modifications required for the product need to be mentioned in text by the user.

10. Some applications - will appear at the bottom left of the page. This is for easy understanding of the specific use of the product.

11. Numerous combinations are possible when pressure switches are provided with accessories like chemical seals, snubbers, remote seals, pipe mounting brackets, combination of switches mounted in a panel etc. Users are requested to provide the details of accessories required in text / drawings, as separate identification codes are provided for pressure switches fitted and supplied with accessories.

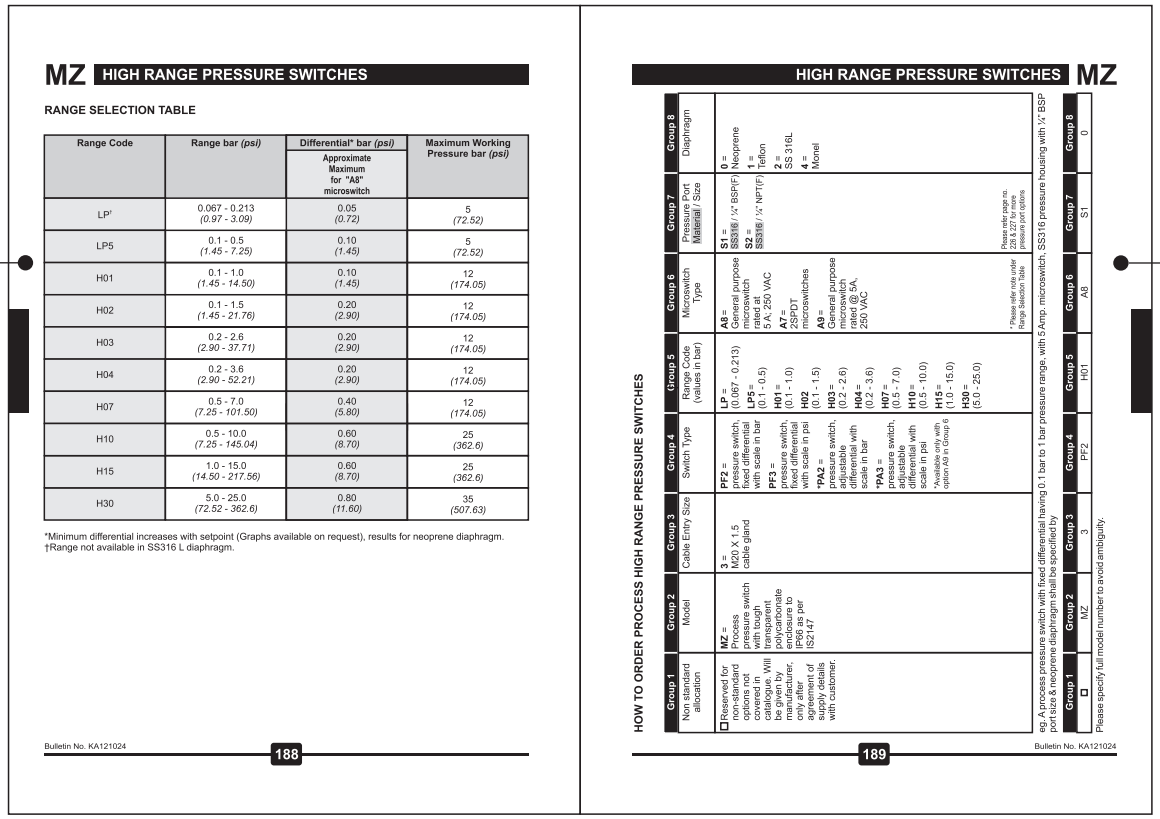

MZ HIGH RANGE PRESSURE SWITCHES

RANGE SELECTION TABLE

Range Code	Range bar *(psi)*	Differential* bar *(psi)* Approximate Maximum for "A8" microswitch	Maximum Working Pressure bar *(psi)*
LP†	0.067 - 0.213 *(0.97 - 3.09)*	0.05 *(0.72)*	5 *(72.52)*
LP5	0.1 - 0.5 *(1.45 - 7.25)*	0.10 *(1.45)*	5 *(72.52)*
H01	0.1 - 1.0 *(1.45 - 14.50)*	0.10 *(1.45)*	12 *(174.05)*
H02	0.1 - 1.5 *(1.45 - 21.76)*	0.20 *(2.90)*	12 *(174.05)*
H03	0.2 - 2.6 *(2.90 - 37.71)*	0.20 *(2.90)*	12 *(174.05)*
H04	0.2 - 3.6 *(2.90 - 52.21)*	0.20 *(2.90)*	12 *(174.05)*
H07	0.5 - 7.0 *(7.25 - 101.50)*	0.40 *(5.80)*	12 *(174.05)*
H10	0.5 - 10.0 *(7.25 - 145.04)*	0.60 *(8.70)*	25 *(362.6)*
H15	1.0 - 15.0 *(14.50 - 217.56)*	0.60 *(8.70)*	25 *(362.6)*
H30	5.0 - 25.0 *(72.52 - 362.6)*	0.80 *(11.60)*	35 *(507.63)*

*Minimum differential increases with setpoint (Graphs available on request), results for neoprene diaphragm.
†Range not available in SS316 L diaphragm.

Bulletin No. KA121024 188

HIGH RANGE PRESSURE SWITCHES MZ

HOW TO ORDER PROCESS HIGH RANGE PRESSURE SWITCHES

Group 1	Group 2	Group 3	Group 4	Group 5	Group 6	Group 7	Group 8
Non standard allocation	Model	Cable Entry Size	Switch Type	Range Code (values in bar)	Microswitch Type	Pressure Port Material / Size	Diaphragm
☐ Reserved for non-standard options not covered in this catalogue. Will be given by manufacturer, only after agreement of supply details with customer.	**MZ** = Process pressure switch with high transparent polycarbonate enclosure to IP65 as per IS2147	**3** = M20 X 1.5 cable gland	**PF2** = pressure switch, fixed differential with scale in bar **PF3** = pressure switch, fixed differential with scale in psi ***PA2** = pressure switch, adjustable differential with scale in bar ***PA3** = pressure switch, adjustable differential with scale in psi *Available only with option A9 in Group 6	**LP** = (0.067 - 0.213) **LP5** = (0.1 - 0.5) **H01** = (0.1 - 1.0) **H02** = (0.1 - 1.5) **H03** = (0.2 - 2.6) **H04** = (0.2 - 3.6) **H07** = (0.5 - 7.0) **H10** = (0.5 - 10.0) **H15** = (1.0 - 15.0) **H30** = (5.0 - 25.0)	**A8** = General purpose microswitch rated at 5A, 250 VAC **A7** = 2SPDT microswitches **A9** = General purpose microswitch with rated @ 5A, 250 VAC *Please refer note under Range selection table	**S1** = SS316 / ¼" BSP(F) **S2** = SS316 / ¼" NPT(F) Please refer page no. 226 & 227 for more pressure port options	**0** = Neoprene **1** = Teflon **2** = SS 316L **4** = Monel

eg. A process pressure switch with fixed differential having 0.1 bar to 1 bar pressure range, with 5 Amp. microswitch, SS316 pressure housing with ¼" BSP port size & neoprene diaphragm shall be specified by

Group 1	Group 2	Group 3	Group 4	Group 5	Group 6	Group 7	Group 8
☐	MZ	3	PF2	H01	A8	S1	0

Please specify full model number to avoid ambiguity.

Bulletin No. KA121024 189

8 9

Switch Construction

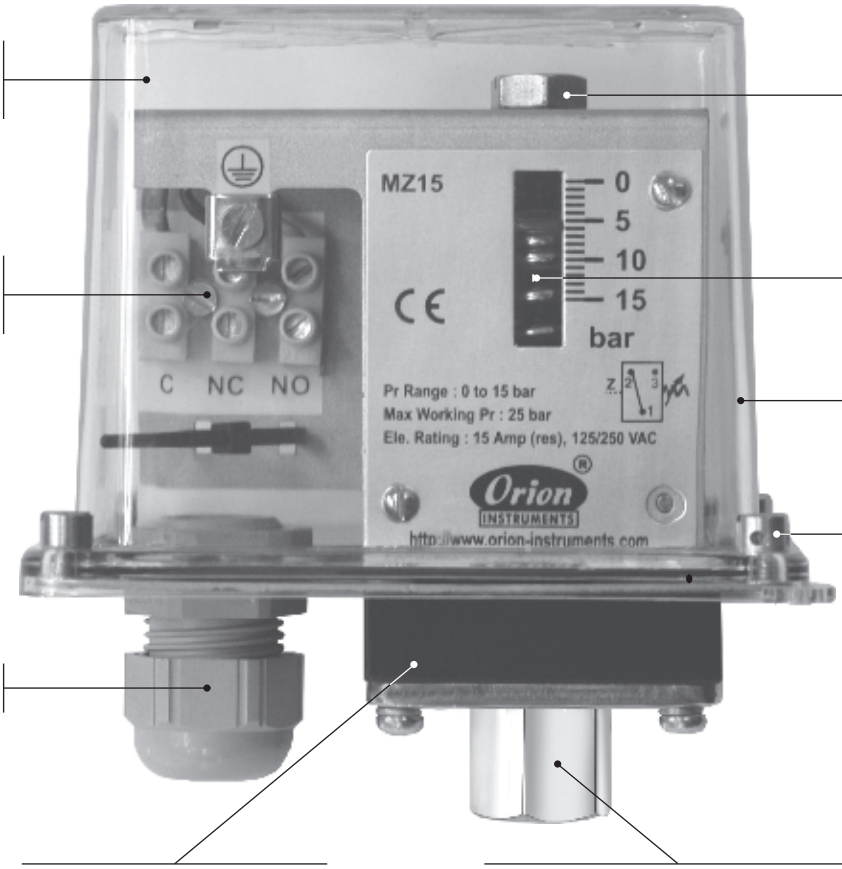

Transparent tough polycarbonate cover for visibility

Separate terminal block for wiring

Cable gland as a standard accessory

Internal setscrew to avoid easy access to setpoint

Large spring for ease of setpoint

IP66 enclosure for excellent ingress protection

Sealing facility to avoid tampering of working switch

Non corroding exteriors for a long life of the switch

SS316 & teflon as wetted parts to switch a wide variety of media

The versatile construction of MZ series process pressure switches can be configured to suit applications, by selecting the following main subassemblies / components :

a) The enclosure

The tough polycarbonate cover, fitted on a stainless steel base, retained by SS screws offers excellent resistance to corrosion, and also allows a view of the internal scale and working of the pressure switch. The reliable snapaction microswitch offers narrow deadband, switching values, which have excellent repeatability. By using appropriate capsules and wetted parts, MZ series pressure switches can be used for thousands of applications.

A standard cable gland (PG13.5 or M20 x 1.5) is provided as a standard accessory.

b) The electrical element (s) :

Choice of electrical elements to suit end use are offered, like :

A8 : General purpose applications

A7 : 2SPDT switching elements

A9 : General purpose applications

It is possible to have more options of electrical elements not published here, to suit individual end use.

The deadband (or hysterisis / on-off differential) of the switches will change with the change of the electrical element (s). The approximate values for each range (for standard microswitches offered) are published in this catalogue

c) The pressure capsule :

To suit the setpoints , the working media and the function of the switch in the application:

High Range Pressure Switches (typically from 0.067 barg to 25 barg) 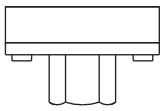	**High Proof High Range Pressure Switches** (typically from 0.1 barg to 25 barg : Pmax = 70) 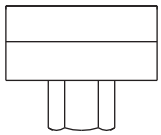	**High Range Pressure Difference Switches** (typically from 0.1 barg to 25 barg) 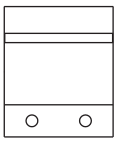
Vacuum Switches (typically from 760 mm Hg to atmospheric pressure) 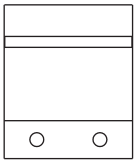	**Hydraulic Range Pressure Switches** (typically from 0.5 barg to 400 barg) 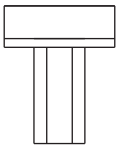	**OEM Switches** (typically from 0.1 barg to 25 barg) 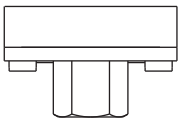

The pressure capsule can be modified to take high proof pressures [typically 100 bar for high pressure switches, or pressure difference switches (from high pressure side)].

Several accessories like chemical seals, pipe mounting brackets etc can be supplied with these switches to suit the media to be sensed. All of these are not listed, though most popular ones can be found on pages 322 through 328.

Please do get in touch with us for any of your applications, not addressed in this catalogue. We would be glad to offer you a solution.

Product Selection Guide

Page No. 186

Page No. 190

Page No. 194

Switch type	High range	High range high proof	Large Bore High Range
Repeatability (% FSR)	± 1	± 2	± 2
Range covered	0.067 bar to 25 bar	0.1 bar to 25 bar	0.1 bar to 25 bar
Enclosure Protection	IP 66		
Enclosure Material	Tough transparent polycarbonate		
WETTED PARTS sensing element Standard	Diaphragm		
Optional	nylon reinforced SS 316L, Teflon, Monel	neoprene diaphragm protected by Teflon SS 316L, Teflon	SS 316L, Teflon, Monel
Pressure housing Standard	SS 316		
Optional	Monel		Monel
Other Wetted Parts	Teflon, SS316		Teflon
Optional wetted parts through chem. seal	-		
Temp. of working medium	For non-metallic diaphragm: 80°C maximum. For metallic diaphragm: 150°C maximum For higher temperature, please use impulse tubing/chemical seals.		
Switching element	SPDT Snap action switch A8 : General purpose rated at 5A, 250 VAC, 0.2 A, 250 VDC resistive. For other switching elements please contact sales office		

Accessories can be supplied with most of the switches. Please consult sales office.

Page No. 198

Page No. 202

Page No. 206

Flanged	Hydraulic	Hydraulic Diaphragm	Switch type
± 2	± 1	± 2	Repeatability (% FSR)
0.1 bar to 200 bar	5 bar to 400 bar	0.5 bar to 400 bar	Range covered
IP 66			Enclosure Protection
Tough transparent polycarbonate			Enclosure Material
Diaphragm nylon reinforced neoprene diaphragm Teflon, SS316L, Hastelloy C, Monel, Titanium, Tantalum	Piston SS	Diaphragm SS316 Monel	sensing element Standard Optional
Flange SS316L Hastelloy C276, Monel, Titanium, Tantalum	SS 316		Pressure housing Standard Optional
Teflon, SS 316	SS	SS316, Teflon	Other Wetted Parts
-	-	-	Optional wetted parts through chem. seal
For non-metallic diaphragm: 80°C maximum. For metallic diaphragm: 150°C maximum For higher temperature, please use impulse tubing/chemical seals.			Temp. of working medium
SPDT Snap action switch A8 : General purpose rated at 5A, 250 VAC, 0.2 A, 250 VDC resistive. For other switching elements please contact sales office			Switching element

WETTED PARTS

Product Selection Guide

Page No. 210

Page No. 214

Page No. 218

Switch type	High range ?p	High Range DP	Vacuum
Repeatability (% FSR)	± 1	± 1	± 2
Range covered	0.1 bar to 3.6 bar	0.1 bar to 25 bar	760 mmHg to 100 mmHg
Enclosure Protection	IP 66		
Enclosure Material	Tough transparent polycarbonate		
WETTED PARTS sensing element Standard Optional	Diaphragm nylon reinforced neoprene diaphragm protected by Teflon Teflon		
Pressure housing Standard Optional	Aluminium SS 316	SS 316	Aluminium SS 316
Other Wetted Parts	Teflon, SS, SS 316	Teflon	Teflon, SS 316
Optional wetted parts through chem. seal			
Temp. of working medium	For non-metallic diaphragm: 80°C maximum. For metallic diaphragm: 150°C maximum For higher temperature, please use impulse tubing/chemical seals.		
Switching element	SPDT Snap action switch A8 : General purpose rated at 5A, 250 VAC, 0.2 A, 250 VDC resistive. For other switching elements please contact sales office		

Accessories can be supplied with most of the switches. Please consult sales office.

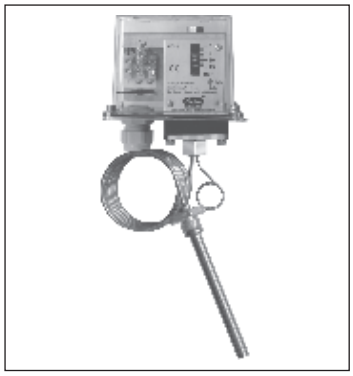

Page No. 222

Temperature	Switch type	
± 1	Repeatability (% FSR)	
25°C to 215°C	Range covered	
IP 66	Enclosure Protection	
Tough transparent polycarbonate	Enclosure Material	
Bulb / Probe Brass	sensing element Standard Optional	WETTED PARTS
	Pressure housing Standard Optional	
	Other Wetted Parts	
	Optional wetted parts through chem. seal	
For non-metallic diaphragm: 80°C maximum. For metallic diaphragm: 150°C maximum For higher temperature, please use impulse tubing/chemical seals.	Temp. of working medium	
SPDT Snap action switch A8 : General purpose rated at 5A, 250 VAC, 0.2 A, 250 VDC resistive. For other switching elements please contact sales office	Switching element	

MZ TEMPERATURE SWITCHES

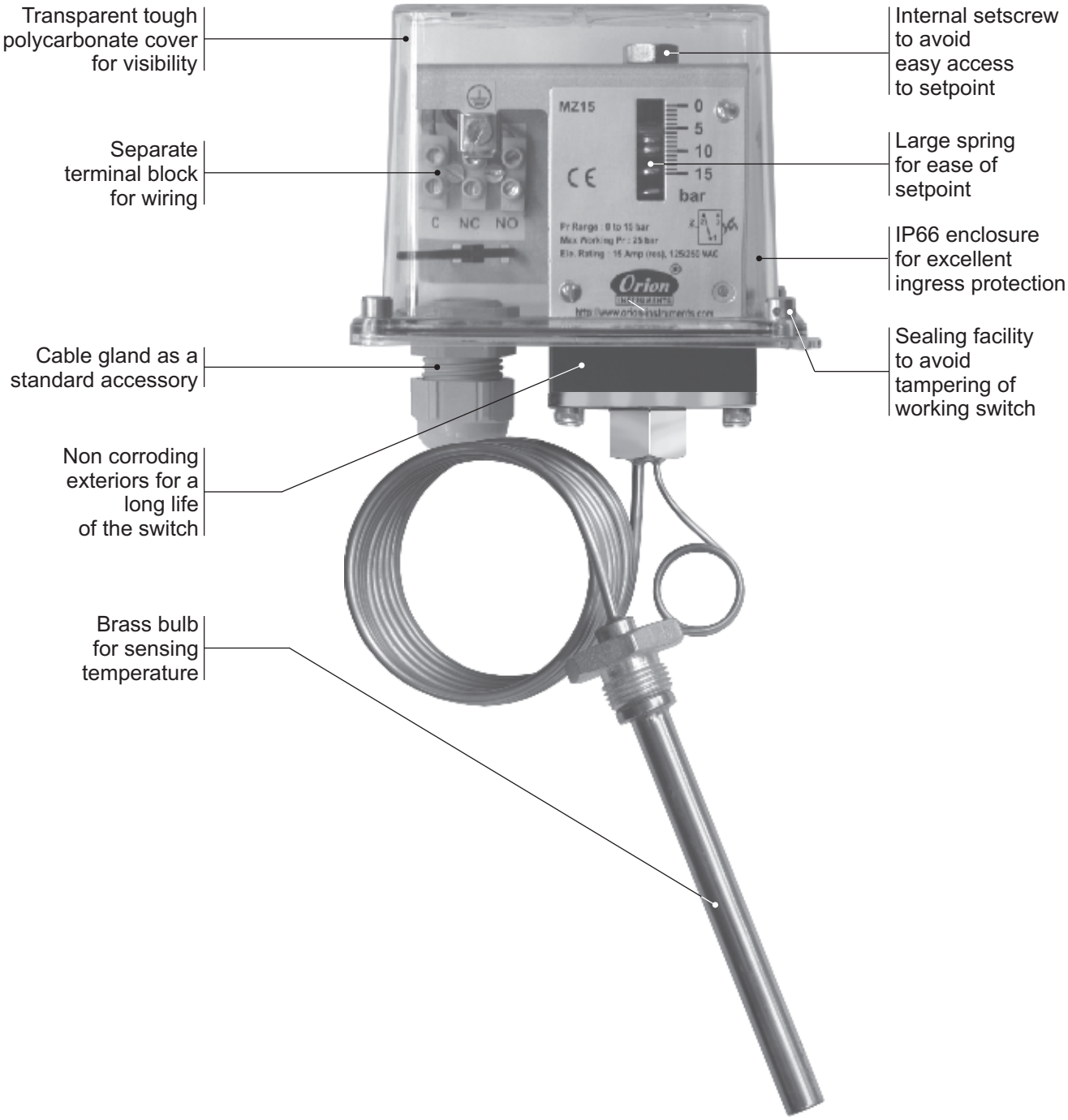

Approximate Weight : 0.700 Kg.

Some Applications :

To detect limiting temperature levels in non-hazardous areas.

Electrical Connection :

Fig. 2

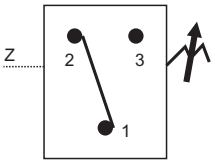

INSTALLATION DRAWING

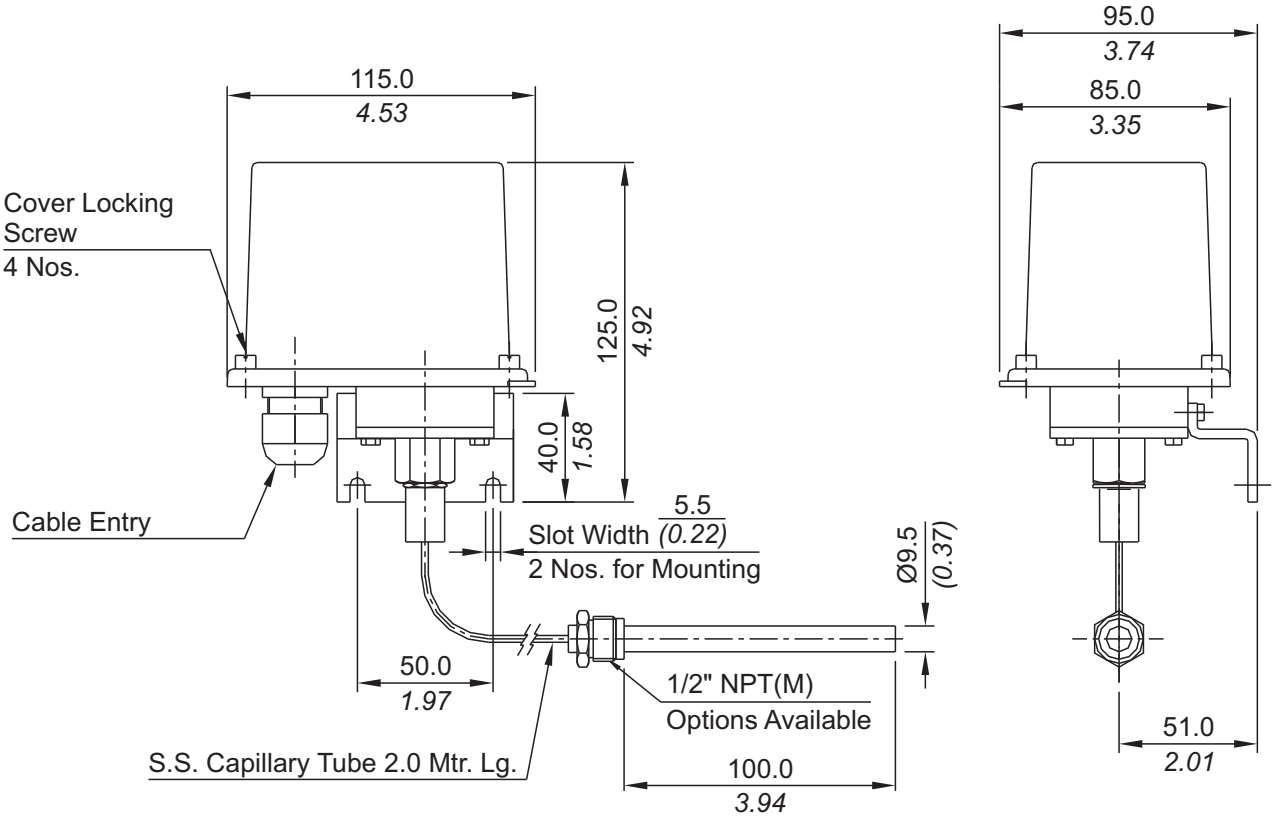

APPROX. DIMENSIONS IN mm / inches

RANGE SELECTION TABLE

Range Code	Range °C (°F)	Differential* °C (°F) Approximate Maximum for "A1" microswitch	Maximum Working Temperature °C (°F)
T1H	25 - 90 (77 - 194)	15 (59)	150 (302)
T2H	70 - 150 (158 - 302)	20 (68)	200 (392)
T3H	120 - 215 (248 - 419)	30 (86)	300 (572)

* Approximate differential at midrange for A1 microswitch. Differentials increase with setpoint.
Diffferentials vary with microswitch combinations. Please consult sales office for details

HOW TO ORDER PROCESS TEMPERATURE SWITCHES

Group 1	Group 2	Group 3	Group 4	Group 5	Group 6	Group 7	Group 8
Non standard allocation	Gas Group Classification	Cable Entry Size	Switch Type	Range Code (values in Deg. Cen.)	Microswitch Type	Temp. Bulb Material / Size	Capillary Material / Size
☐ Reserved for Non-standard Options not covered in Catalogue. Will Be given by Manufacturer, Only after Agreement of Supply details With customer.	**MZ** = Process temperature switch with tough transparent polycarbonate Enclosure to IP66 as per IS2147	**3** = M20 X 1.5 threads	**TF1** = Temperature Switch fixed differential without scale **TF2** = Temperature Switch fixed differential with scale in °C	**T1H** = 25 - 90 **T2H** = 70 - 150 **T3H** = 120 - 215	**A1** = General purpose microswitch rated at 15 A; 250 VAC **A7** = 2SPDT switching elements **A8** = General purpose microswitch rated at 5A; 250 VAC **A9** = General purpose microswitch rated at 5A; 250 VAC	**B1** = Brass / Dia. 9.5 mm, 123 mm length, with 3/8" BSP (M) thermowell connection **B2** = Brass / Dia. 9.5 mm, 123 mm length, with 3/8" NPT (M) thermowell connection **B3** = Brass / Dia. 9.5 mm, 123 mm length, with 1/2" NPT (M) thermowell connection	**2** = SS316 / 2.0 meter

E.g. A Process Temperature switch, with M20x1.5 cable entry as 1 SPDT, fixed differential with scale, having 25˚C to 90˚C temperature range, with 15 Amp. microswitch, with Brass 9.5 mm diameter bulb, having length 123 mm with 3/8"BSP(M),with 2.0 meter SS316 capillary length shall be specified by

Group 1	Group 2	Group 3	Group 4	Group 5	Group 6	Group 7	Group 8
☐	MZ	3	TF2	T1H	A1	B1	2

Please specify full model number to avoid ambiguity.

FLANGE CODE TABLE

Flanges conform to ANSI B16.5; maximum pressure is limited by flange rating

Class	Stainless Steel		Hastelloy		Alloy 400		Titanium		Tantalum	
	316 L		C276		Monel					
150#	Raised	Flat	Raised	Flat	Raised	Flat	Raised	Flat	Raised	Flat
1/2"	AA	BQ	DG	EW	GM	IC	JS	LI	MY	OO
3/4"	AB	BR	DH	EX	GN	ID	JT	LJ	MZ	OP
1"	AC	BS	DI	EY	GO	IE	JU	LK	NA	OQ
1 1/4"	AD	BT	DJ	EZ	GP	IF	JV	LL	NB	OR
1 1/2"	AE	BU	DK	FA	GQ	IG	JW	LM	NC	OS
2"	AF	BV	DL	FB	GR	IH	JX	LN	ND	OT
300#	Raised	Flat	Raised	Flat	Raised	Flat	Raised	Flat	Raised	Flat
1/2"	AG	BW	DM	FC	GS	II	JY	LO	NE	OU
3/4"	AH	BX	DN	FD	GT	IJ	JZ	LP	NF	OV
1"	AI	BY	DO	FE	GU	IK	KA	LQ	NG	OW
1 1/4"	AJ	BZ	DP	FF	GV	IL	KB	LR	NH	OX
1 1/2"	AK	CA	DQ	FG	GW	IM	KC	LS	NI	OY
2"	AL	CB	DR	FH	GX	IN	KD	LT	NJ	OZ
400#	Raised	Flat	Raised	Flat	Raised	Flat	Raised	Flat	Raised	Flat
1/2"	AM	CC	DS	FI	GY	IO	KE	LU	NK	PA
3/4"	AN	CD	DT	FJ	GZ	IP	KF	LV	NL	PB
1"	AO	CE	DU	FK	HA	IQ	KG	LW	NM	PC
1 1/4"	AP	CF	DV	FL	HB	IR	KH	LX	NN	PD
1 1/2"	AQ	CG	DW	FM	HC	IS	KI	LY	NO	PE
2"	AR	CH	DX	FN	HD	IT	KJ	LZ	NP	PF
600#	Raised	Flat	Raised	Flat	Raised	Flat	Raised	Flat	Raised	Flat
1/2"	AS	CI	DY	FO	HE	IU	KK	MA	NQ	PG
3/4"	AT	CJ	DZ	FP	HF	IV	KL	MB	NR	PH
1"	AU	CK	EA	FQ	HG	IW	KM	MC	NS	PI
1 1/4"	AV	CL	EB	FR	HH	IX	KN	MD	NT	PJ
1 1/2"	AW	CM	EC	FS	HI	IY	KO	ME	NU	PK
2"	AX	CN	ED	FT	HJ	IZ	KP	MF	NV	PL
900#	Raised	Flat	Raised	Flat	Raised	Flat	Raised	Flat	Raised	Flat
1/2"	AY	CO	EE	FU	HK	JA	KQ	MG	NW	PM
3/4"	AZ	CP	EF	FV	HL	JB	KR	MH	NX	PN
1"	BA	CQ	EG	FW	HM	JC	KS	MI	NY	PO
1 1/4"	BB	CR	EH	FX	HN	JD	KT	MJ	NZ	PP
1 1/2"	BC	CS	EI	FY	HO	JE	KU	MK	OA	PQ
2"	BD	CT	EJ	FZ	HP	JF	KV	ML	OB	PR

FLANGE CODE TABLE

Flanges conform to ANSI B16.5; maximum pressure is limited by flange rating

Class	**Stainless Steel**		**Hastelloy**		**Alloy 400**		**Titanium**		**Tantalum**	
	316 L		C276		Monel					
1500#	Raised	Flat	Raised	Flat	Raised	Flat	Raised	Flat	Raised	Flat
1/2"	BE	CU	EK	GA	HQ	JG	KW	MM	OC	PS
3/4"	BF	CV	EL	GB	HR	JH	KX	MN	OD	PT
1"	BG	CW	EM	GC	HS	JI	KY	MO	OE	PU
1 1/4"	BH	CX	EN	GD	HT	JJ	KZ	MP	OF	PV
1 1/2"	BI	CY	EO	GE	HU	JK	LA	MQ	OG	PW
2"	BJ	CZ	EP	GF	HV	JL	LB	MR	OH	PX
2500#	Raised	Flat	Raised	Flat	Raised	Flat	Raised	Flat	Raised	Flat
1/2"	BK	DA	EQ	GG	HW	JM	LC	MS	OI	PY
3/4"	BL	DB	ER	GH	HX	JN	LD	MT	OJ	PZ
1"	BM	DC	ES	GI	HY	JO	LE	MU	OK	QA
1 1/4"	BN	DD	ET	GJ	HZ	JP	LF	MV	OL	QB
1 1/2"	BO	DE	EU	GK	IA	JQ	LG	MW	OM	QC
2"	BP	DF	EV	GL	IB	JR	LH	MX	ON	QD

RANGE AVAILABILITY AS PER BORE SIZES

	H01 to H04	H07	H10	H15	H30	H2T to H2H
1" NB	NA	Yes	Yes	Yes	Yes	Yes
2" NB	Yes	Yes	Yes	Yes	Yes	Yes

Following table lists standard microswitches and there electrical ratings that can be supplied with most FC and MD models. Some can be supplied on MZ models too. Please get in touch with sales office for feasibility of options on each model. Please write to us on electrical rating options you need, but are not mentioned below.

		AC Rating			DC Rating		
		Current		Voltage	Current		Voltage
Code	**General Description**	**Resistive (A)**	**Inductive (A)**	**VAC**	**Resistive (A)**	**Inductive (A)**	**VDC**
A1	General Purpose Microswitch	15	NA	125/250/480	NA	NA	NA
A2	Hermetically Sealed for Corrosive Environments	4	2	115	4	2	28
A3	Gold Plated Contacts for Low Voltage Applications	1	NA	125	NA	NA	NA
A4	DPDT Configuration	10	NA	125/250	0.3/0.15	NA	125/250
A5	For High DC Ratings	NA	NA	NA	10/3	7.5/2	125/250
A6	Elements with Adjustable Deadband	15	NA	115/250	1	NA	24
A7	2SPDT Switching Elements	5	NA	250	5	3	28
A8	General Purpose Microswitch	5	NA	250	5	3	28
A9	General Purpose Microswitch	5	NA	125/250	NA	NA	NA
B2	2SPDT Hermetically Sealed Microswitches	4	2	115	4	2	28
B3	2SPDT Gold Plated Contacts for Low Voltage Applications	1	NA	125	1	0.5	30
B4	2SPDT Hermetically Sealed Microswitches	NA	NA	NA	1	0.25	28
B5	1SPDT Hermetically Sealed Gold Plated Contacts	NA	NA	NA	1	0.25	28
B6	2SPDT Hermetically Sealed Gold Plated Contacts	NA	NA	NA	1	0.25	28
B7	2SPDT Switching Elements	15	NA	125/250	NA	NA	NA
B9	2SPDT Switching Elements for Adjustable	5	NA	125/250	NA	NA	NA

Introduction

The initial of our product lines, these switches are meant for light duty applications for the OEM industry. Many of them need to be used in clean atmospheres, sometimes inside a panel. These are compact, low cost and built just for the intended use. Most of them can be configured for a particular purpose by selecting the wetted parts, but electrical ratings are restricted to 5 A, 250 VAC.

APPLICATIONS

- Lubrication Systems
- Steam Sterilisers
- Hospital Equipment
- Water treatment
- Fire protection
- Machine Tools
- Boilers and Compressors
- Furnaces
- Textile Machinery
- Pharmaceuticals
- Hydraulics & Pneumatics
- Automobiles

PRODUCT SPECIFICATIONS:

- Storage temperature : Atmospheric temperature
- Operating ambient temperature : - 20° C to + 60° C
- Media temperature : for rubber diaphragms 80° C max
- Can be offered for higher temperatures with other capsule combinations
- Setpoint repeatability : ± 1 % of FSR
- Enclosure : Pressed steel powder coated with plastic cover
- Switch output : Choice of SPDT, 2SPDT, hermetically sealed, gold plated contacts
- Process connection : ¼" BSP standard, other options like flanges, triclover clamps, diaphragm seals available.
- Accessories : Adaptors, 2" pipe-mounting brackets, syphons, impulse tubes etc.

FEATURES

- Compact
- Scale for easier setpoint (optional)
- Enclosure protection : upto IP 65 (varies with model)
- Reliable accurate microswitches for long life switching
- Customized arrangements for switching values on request
- Easy safe wiring options
- Field adjustable
- Accuracy +/- 1 % FSR
- Warranty : 2 years

*Accuracy changes with switch configuration